EXPORT MARKETING RESOURCES AND THEIR PERFORMANCE IMPLICATIONS: A FRAMEWORK AND EMPIRICAL ANALYSIS

By

Anon Khamwon

A Thesis

Submitted to Victoria University of Wellington

in fulfilment of the requirements for the degree of

Doctor of Philosophy

in Marketing

Victoria University of Wellington

2012

ABSTRACT

Why some firms perform better than others is a central question in business research. Since the mid 1980s, the dominant paradigm relating to this issue is the resource-based view of the firm (RBV). The RBV is based on the premise that firms are bundles of heterogeneous, imperfectly mobile resources, and that advantage-generating resources, rather than market and industry structures, are the most critical determinants of firm success. Originating in the field of strategic management, the RBV has become a major focus of marketing scholars, and a new direction of marketing literature has recently emerged, drawing on marketing resources.

Although the RBV has received considerable attention in the marketing literature, the growing theoretical and conceptual works on marketing resources are not mirrored in empirical investigation. More specifically, while significant contributions, such as those from Srivastava et al.'s (2001) relational and intellectual market-based assets framework, have been made to the theoretical side of the RBV and marketing, little has been done, so far, with respect to its empirical side. Moreover, the majority of the theoretical and empirical insights on the antecedents of export performance are based on the structure-conduct-performance (SCP) paradigm or atheoretical models. Little attention has been given to the process of building competitive advantage and the meaningful idiosyncratic combinations of export market resources that can be used efficiently and effectively by firms competing in export markets.

To fill these voids in the literature, this study aims to investigate the sources of competitive advantage and superior export performance by focusing on export market-based assets and capabilities. An integrated framework of export marketing resources and their performance implications is empirically tested with data collected from 320 manufacturing export firms in Thailand. Structural equation modeling (SEM) is used to examine the interrelationships among the theoretical constructs.

The findings of the study provide groundwork for the understanding of the resource building blocks in the export firms and the internal process through which export marketing resources influence firm performance in the export markets. Tangible export market-based assets indirectly contribute to export performance through export market-based capabilities and export competitive advantage. The effects of relational and intellectual export market-based assets on export performance are mediated by export market-based capabilities and export competitive advantage, whereas the effects of export market-based capabilities on export performance are mediated by export competitive advantage.

This study demonstrates and explains the richness of the RBV as the basis for assessing the ability of the firms to exploit export marketing resources as a means to enhance their performance. Hence, the study expands the growing body of literature on export marketing and export performance research by adopting a fresh theoretical perspective of the resource-based strategy. The theoretical framework and its empirical validation underpinning the study could provide a new explanation as to why some export firms are more successful than others.

ACKNOWLEDGEMENTS

I am sincerely grateful to those who have contributed to the completion of this thesis. First, I would like to express my deepest gratitude to my supervisors, Associate Professor Val Lindsay and Professor Nicholas Ashill. Their continuous guidance, support, enthusiasm, and patience motivated me to grow in numerous ways and assume new challenges. Working with Nick and Val has been a pleasurable and memorable experience. I greatly appreciate the time they devoted to mentor and share with me their knowledge.

I owe special thanks to Professor Rajendra Srivastava for research inspiration during his visit to the School. Moreover, this research benefited greatly from my PhD proposal seminar. I am especially thankful to Professor Ashish Sinha, Professor Peter Thirkell, Professor Peter Dowling, and Dr. James Richard for their helpful comments. Thanks to Professor Kim Fam, the Head of the School of Marketing and International Business, and Professor David Crick, the PhD Director, for making smoother my PhD studies. I also offer my thanks to the members of the administration: Jacqui Fitzgerald, Jessie Johnston, and others.

I would also like to express my gratitude to Victoria University of Wellington for believing in this research and honouring me with a Victoria Doctoral Scholarship.

Special thanks to all my PhD colleagues: Stephan, Lachie, Garoon, Petarpa, Phuong, Banjo, Aaron, Lanthom, Suzana, Cruise, Lin, Vu, Matnoor, Farhana, Nick, and Janine. They were like a big warm family, always standing together to support me during the weekdays and the weekends, through my years of academic studies.

Even with all these supports, my thesis would never have been accomplished without the respondents. I would like to state my appreciation for the kind cooperation and support of the CEOs, MDs, GMs, and senior-level mangers who participated in this research.

Finally, I am greatly indebted to my family whose patience and tolerance were critical in completing this thesis. Their love and encouragement have given me the strength to successfully pursue my academic goal.

TABLE OF CONTENTS

LIST OF TABLES

LIST OF FIGURES

CHAPTER 1: INTRODUCTION

This chapter begins with a discussion about the background of the research, which is followed by the research question and objectives and then the contributions of the research. The last section highlights the outline of the thesis. Figure 1.1 shows the road map of the chapter.

Figure 1.1: Outline of Thesis Structure

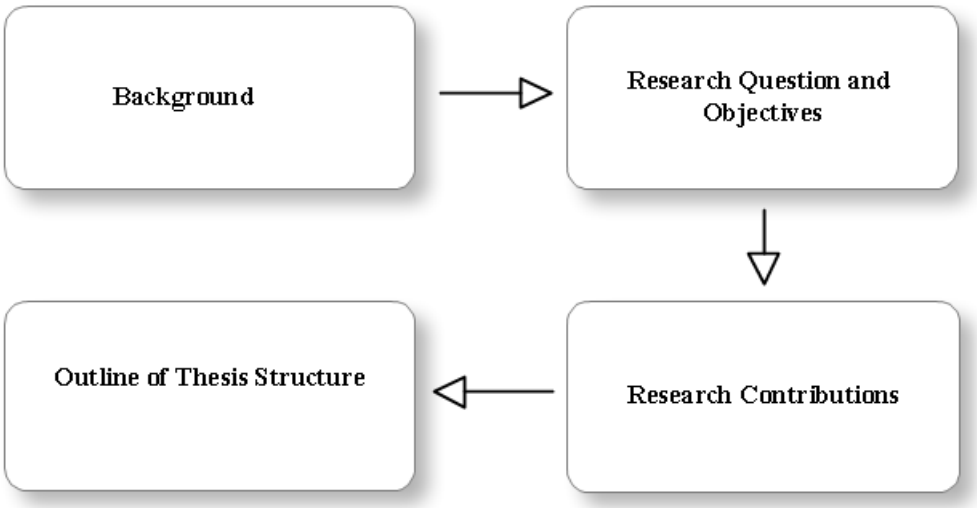

1.1. Background

Why some firms perform better than others is a central question in many business disciplines and the subject of never-ending debate. Since the mid 1980s, the dominant paradigm relating to this issue is the resource-based view of the firm (RBV). The RBV indicates that firms are bundles of heterogeneous, imperfectly mobile resources (Wernerfelt, 1984; Barney and Clark, 2007; Becerra, 2008). Resources, if distinctive or superior relative to those of rivals, constitute firm-specific assets and capabilities, which are the basis of firms' competitive advantage and hence contribute to the growth of the firms (Barney, 1991; Grant, 1991; Collis and Montgomery, 1998;

Newbert, 2007). The contributions of the RBV to explaining variations in business performance are considerable compared to the explanatory value of the structure-conduct-performance (SCP) paradigm. For example, a four-year longitudinal study found that industry conditions explained four percent of profitability variation, whereas firms' resources explained forty-six percent (Rumelt, 1991). Recent research also reported that industry conditions explained three percent, and firms' resources explained thirty-six percent of performance variation (Lopez, 2001). Thus, advantage-generating resources, rather than industry and market structures, are the most critical determinants of firm success (Wernerfelt, 1984; Rumelt, 1991; Peteraf and Barney, 2003; Newbert, 2007; Becerra, 2009). The RBV, with its advantage-seeking perspective, has dominated much of the research and thinking in the field of strategic management (Barney and Arikan, 2005; Acedo et al., 2006; Kraaijenbrink et al., 2010).

The RBV has become a major focus among marketing scholars, and a new direction of marketing literature has recently emerged, drawing on marketing resources. There have been many attempts by leading marketing theorists to provide a broad-based integration of the RBV and marketing. Scholars have proposed several configurations and classifications of marketing resources: market-based capabilities (Day, 1994), market-based assets (Srivastava et al., 1998; Srivastava et al., 2001), and marketing assets and capabilities (Hooley et al., 1998; Hooley et al., 2001). Marketing resources, including market-based assets and capabilities, contribute toward idiosyncratic management and firm heterogeneity to create sustained competitive advantage and superior performance (Day, 1994; Srivastava et al., 1998; Srivastava et al., 2001).

In spite of these efforts in understanding marketing resources, extant research on export performance has focused primarily on the direct link between resources and performance outcomes (Sousa et al., 2008; Navarro et al., 2010). The internal process through which export marketing resources influence export performance is not well understood. There are relatively few studies addressing the role of marketing resources, competitive advantage, and superior performance in an export setting. To date, Morgan et al.'s (2004) work has been considered a successful framework providing a sound theoretical basis in applying the RBV in export performance research (Styles et al., 2008; Lages et al., 2009). Their study highlights some marketing resources, including physical assets, scale of operation, financial assets, and experience in export markets, as well as capabilities, including informational, relationship building, and product development capabilities. These findings however raise an important research issue as to whether different types of firm resources can give rise to export competitive advantage and export performance.

In advancing export marketing theory and practice, different dimensions and configurations of export marketing resources should be further investigated (Morgan et al., 2004; Murray et al., 2011). More specifically, Srivastava et al.'s (2001) market-based assets framework in gaining competitive advantage is a promising concept to establish a better understanding of the export marketing resources and their performance implications. Srivastava et al. (2001) developed the market-based assets framework that facilitates integration of constructs central to the RBV and marketing. Their framework identifies a number of ways by which marketing resources can be used to deliver superior customer value that ultimately result in increased competitive advantage and desirable firm performance. Srivastava et al. (2001) stated that the ability to generate and sustain customer value and competitive advantage and in turn

leverage firm performance is through the recognition of channels, distributors, customers, strategic partners, and other key stakeholders as relational market-based assets, whereas market knowledge, customer-driven culture, and market orientation must be recognised as intellectual market-based assets. Relational and intellectual market-based assets, as strategically intangible assets, represent the core new competitive advantage creation and help to accelerate the growth/performance of the firm (Srivastava et al., 1998; Srivastava et al., 2001). Furthermore, relational and intellectual market-based assets may be required to invigorate and unleash the customer value-generating potential embedded in tangible assets in building market-based capabilities, which are the integrative processes enabling firms to add value in their offerings to the markets (Srivastava et al., 1998; Srivastava et al., 2001). Despite their significant role in the creation of competitive advantage, relational and intellectual market-based assets have undergone limited empirical examination in the literature.

Although the RBV paradigm has received considerable attention in the marketing literature, the growing theoretical and conceptual works on marketing resources are not mirrored in empirical investigations (Zou et al., 2003; Hooley et al., 2005; Murray et al., 2011). More particularly, while Srivastava et al.'s (2001) relational and intellectual market-based assets framework has been conceptualised and extensively cited in marketing literature, there is a general lack of empirical studies examining the role of relational and intellectual market-based assets in gaining competitive advantage and superior performance. Much of the research on this topic has been done at a conceptual level. Establishing an empirical platform is one of the resource-based theory's great challenges because it emphasises upon the idiosyncratic nature of firms' assets and capabilities (Fahy and Smithee, 1999; Priem and Butler, 2001;

Srivastava et al., 2001; Newbert, 2007). Even though resource constructs are difficult to operationalise, Levitas and Chi (2002) strongly encouraged the undertaking of empirical research on the RBV and argued that the benefits of attempting to empirically examine and verify patterns relating to the effects of resources on firm success far outweigh the void of having no results at all. In addition, the majority of the theoretical and empirical insights on the antecedents of export performance are based on the SCP paradigm or atheoretical models (Zou and Stan, 1998; Styles et al., 2008). Little attention has been given to the process of building competitive advantage and the meaningfully distinctive combinations of export market resources that can be used efficiently and effectively by firms competing in the export markets (Kaleka, 2002; Morgan et al., 2004). Morgan et al. (2004) found that the RBV is far more important than the SCP in determining export performance variations and recommended marketing researchers to pay particular attention to delineating and assessing export marketing resources in order to build on the RBV approach to explaining competitive advantage and performance. This represents a good opportunity to conduct an empirical research that integrates the resource-based view of strategy into the domain of export marketing.

Against this background, the study represents one of the pioneer attempts to empirically investigate the sources of competitive advantage and superior performance by focusing on export market-based assets and capabilities. Export market-based assets can be defined as the resource endowments that firms have acquired or built over time and that can be deployed to advantage in the export markets (Srivastava et al. 1998; Fahy and Smithee, 1999; Srivastava et al., 2001; Hooley et al., 2001; Zou et al., 2003). Export market-based assets consist of not only tangible market-based assets but also intangible (relational and intellectual) market-

based assets (Srivastava et al. 1998; Srivastava et al., 2001). On the other hand, export market-based capabilities are the integrative processes by which available assets are developed, combined, and transformed into value offerings for the export markets (Day, 1994; Morgan et al., 2004; Kaleka, 2011).

The study highlights the important role of the strategic relationships such as supply chain and strategic alliances as relational market-based assets that arise from the commingling of firms with entities in their external environment (Srivastava et al., 1998; Ling-Yee and Ogunmokun, 2001; Srivastava et al., 2001; Greenley et al., 2005). The study also utilises the concept of external and internal market orientation to capture the notion of intellectual market-based assets. Firms facing market heterogeneity regarding demand and supply stand to benefit greatly from adopting market orientation which advocates systematic acquisition, dissemination, and use of intelligence information to develop and market the appropriate goods and services that are valued by their customers in the markets (Cadogan and Diamantopoulos, 1995; Hunt and Morgan, 1995; Srivastava et al., 2001; Lings, 2004; Morgan et al., 2009). This intelligence can be embedded in the individuals and processes of the firms, and it is crucial for the development and acquisition of customer-based knowledge (Srivastava et al., 2001; Lings, 2004; Lings and Greenley, 2005; Zerbini et al., 2007). By incorporating external and internal market orientation as intellectual market-based assets, the study should provide more understanding regarding how market knowledge resides within the export firms.

As a result, the integrated framework and empirical research of export marketing resources, incorporating tangible and intangible (relational and intellectual) export market-based assets and capabilities, are needed in order to provide additional

theoretical and managerial insights for a better comprehension of how firms compete in the export markets. Thus, the study extends the RBV into the domain of export marketing and demonstrates the richness of the resource-based strategy as the basis for assessing the ability of export firms to exploit these export marketing resources and enhance their export performance.

1.2. Research Question and Objectives

Research Question

How do export marketing resources, including tangible and intangible (relational and intellectual) export market-based assets and export market-based capabilities, enable a firm to achieve competitive advantage and superior performance in the export markets?

Research Objectives

In answering this research question, the study takes into account the process of resource deployment in realising the value of export marketing resources to explain export performance. The study aims to achieve the following research objectives.

1) To examine the direct effect of tangible and intangible (relational and intellectual) export market-based assets on export market-based capabilities and export competitive advantage.

2) To examine the moderating influence of intangible (relational and intellectual) export market-based assets on the relationship between tangible export market-based assets and export market-based capabilities.

3) To examine the direct effect of export market-based capabilities on export competitive advantage.

4) To examine the direct effect of export competitive advantage on export performance.

1.3. Research Contributions

As a consequence of the growing importance of exporting activity, export marketing has become a priority for academics, practitioners, and government policy makers. It is expected that the study will contribute to their knowledge in the following ways.

With respect to the academic community, a large number of conceptual and empirical studies have been developed to discover the antecedents of export performance, and the mainstream research is primarily based on the SCP paradigm or atheoretical models. Far less attention has been given to the sources of competitive advantage and the meaningful idiosyncratic combinations of export market resources that can be used efficiently and effectively by firms competing in export markets. There is limited understanding of how the possession of these marketing resources leads to a better performance.

The present study moves beyond a simple resources - performance link in the export marketing and export performance literature and attempts to fully capture the internal process through which export marketing resources influence export performance. This provides a clear picture of how export firms can gain benefits from tangible and intangible (relational and intellectual) export market-based assets and capabilities. Furthermore, distinguishing between these tangible assets, intangible assets, and capabilities that firms develop and deploy, as explanations of performance variations, is also an important theoretical distinction in the RBV research, supported empirically in this study. Hence, the contributions of the study come from a more comprehensive adaptation of the RBV theory to the context of export marketing. The integrated framework and its empirical validation underpinning the study presents a more

complicated relationship between export marketing resources and their performance implications than has been assumed in past studies. This can offer a new explanation as to why some export firms are more successful than others. The study could be beneficial for scholars who are seeking a theoretical framework and its application in this area. The findings of the study should provide an initial inspiration to researchers who are interested in the investigation of whether or not the combination of these marketing resources would be a powerful strategy for firms achieving competitive superiority in different contexts.

For practitioners, the integrated framework and its empirical validation underpinning the study has the potential to offer managers strategic insights and useful guidelines for improving their firms' performance. The deployment of export marketing resources and the underlying process through which these marketing resources influence firm success should play a significant role in firms' competitive strategies. For example, relational and intellectual export market-based assets themselves (e.g., strategic alliance and market orientation) may not help firms attain competitive advantage without managerial efforts in transforming these intangible assets into export market-based capabilities in delivering values in terms of lower cost, high quality products, and superior services for overseas customers. The findings of the study can provide managers a clear understanding for making a right decision to identify and build export market-based assets and capabilities that provide their firms with competitive advantage in the export markets.

Finally, the study should provide some direction for government policy makers to help export firms increase their competitiveness through government schemes and

programs toward emphasising the importance of export marketing resources and the associated performance implications. Although financial assistance should be used to help firms acquire tangible export market-based assets (e.g., capital funds, modern technology and equipment), only financial loans might not bring export success. Governments should allocate their budget to provide marketing knowledge and training through national export-promotion programs to broaden firms' intellectual export market-based assets and capabilities. Furthermore, establishing business clusters to create supply chains and alliance networks is an example of a government scheme to promote firms' relational export market-based assets. Governments should encourage their manufacturing exporters to seek the appropriate government assistance to help them overcome their resource constraints, and firms should take advantage of these schemes and programs for greater export success.

1.4. Outline of Thesis Structure

This thesis is divided into eight chapters. Chapter One has provided the background of the study and its contributions. Chapter Two provides the literature review pertaining to the industry-based theory, the resource-based view of the firm, export marketing resources, and export performance. Chapter Three presents a conceptual framework and hypotheses development. Chapter Four discusses the research methodology and the techniques adopted for data collection, sampling process, questionnaire development, and data analysis. Chapter Five reports the preliminary data analysis. Chapter Six presents the findings of the study, based on structural equation modeling (SEM). Chapter Seven provides discussion and presentation of the EMRs framework, which is the framework of export marketing resources and performance implications. Chapter Eight provides a conclusion; research implications, the limitations of the study, and the possible directions for further research are also presented.

CHAPTER 2: LITERATURE REVIEW

This chapter provides a comprehensive review of the theoretical basis upon which the conceptual framework is developed. The literature review consists of four main sections: the industry-based theory, the resource-based view of the firm, export marketing resources, and export performance. Figure 2.1 shows the outline of the chapter.

Figure 2.1: Outline of Thesis Structure

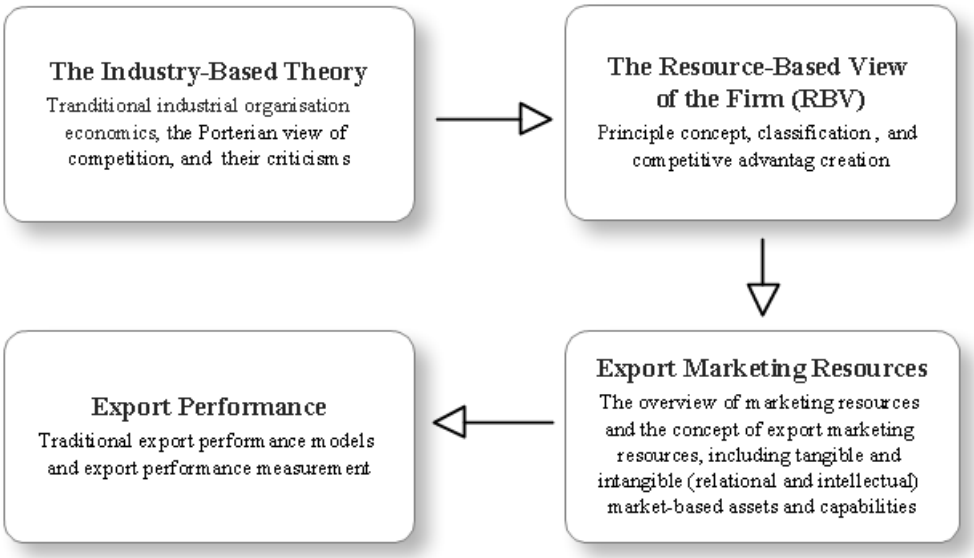

2.1. The Industry-Based Theory

The primary mission of strategic management is the analysis of performance differences among firms (Levinthal, 1995; McGrath et al., 1995; Barney and Clark, 2007). There are two major theoretical explanations accounting for the differences in firm performance that dominate contemporary strategic management literature. A traditional theory attributes to the economic attractiveness of the structural factors of the industries within which firms are a member. This stream of thought belongs to the

school of industrial organisation economics. Based on economic roots, but shifting the locus of attention away from the industry structure, another stream theorises that differences in firm success are attributable to internal firm-level factors. This stream concentrates on resources as the unit of analysis in determining performance heterogeneity among firms. The first category mentioned above is the structure-conduct-performance (SCP) paradigm of industrial organisation, and the second is known as the resource-based view of the firm (RBV), which is currently seen as the most influential framework for understanding strategic management (Barney et al., 2001; Acedo et al., 2006; Kraaijenbrink et al., 2010).

Although the primary focus of this thesis is with respect to the RBV theory, the SCP paradigm is also illustrated by focusing on the traditional industrial organisation economics and the Porterian view of competition. The rationale behind discussing these theories is based on several justifications. First, the evolution of competitive strategies has been influenced and grounded by the industry-based theory. More particularly, the seminal works of Porter (1980, 1985) have made a major contribution to the understanding of the theory of competition, which is itself a fundamental building block for the development of strategy. His works have brought analytical rigor and practical frameworks to a subject that previously lacked such credentials. Subsequently, strategic management is now recognised as a credible discipline in its own right (Stonehouse and Snowdon, 2007). Second, although the industry-based theory has provided an important contribution to the development of strategy as a discipline, it is not without its own limitations. These criticisms, which led to the emergence of the RBV, have also been included in this section.

2.1.1 Traditional Industrial Organisation Economics

Industrial organisation economics (IO) focuses on industry structure as the main determinant of performance across industries, while ignoring the importance of intra-industry heterogeneity (Mauri and Michaels, 1998). The external environment is argued to be a central theme within the traditional IO theory. Basic contributions to the IO are the works of Mason (1939) and Bain (1956). Mason (1939) was one of the first to posit that there is a deterministic association between industry structure and firm performance. Bain (1956) produced his seminal work emphasising the SCP paradigm, which reinforces the importance of industry structure as the key determinant of the performance variance among firms competing in different industries.

The roles of firm size and industry concentration are particularly emphasised within the SCP paradigm. For example, Bain (1956, 1959) emphasised that industry concentration and barriers to entry interact to increase the performance of large firms. Martin (1993) argued that economies of scale, product differentiation, and absolute capital requirements act as barriers to entry. Larger firms tend to be the benefactors of such structural phenomenon. High levels of industry concentration encourage collusive and even monopolistic behaviour that allows firms to exercise market power by restricting competition (Bain, 1956; Martin, 1993; Grant, 2002). High levels of industry concentration and difficult barriers to entry lead to collusive agreements and monopoly power which increase the performance of large firms. Thus, firms exist to restrain productive output through collusive agreements that ultimately lead to larger firms and monopoly power (Bain, 1959; Conner, 1991). Firms which restrain output

can then charge higher prices and gain larger profits. Moreover, the restriction of competition forces customers to accept poorer quality products at high prices because the benefits of innovation are constrained in the market (Jacobson, 1992). In this scenario, the motivation for firm expansion is to increase monopolisation, either through vertical integration of downstream industries (Vernon and Graham, 1971), or through building other barriers to entry such as product differentiation (Sutton, 1991). The ability to build strong barriers to entry and the pursuit of monopoly control tend to favour larger firms, given the assumption of relatively stable, static market environments within the Bain-type IO theory (Porter, 1981). The key to the application of the development of IO logic for the development of a competitive strategy is to select a domain whose structure is conducive to imperfect competitive dynamics and also a situation where monopoly rents can be extracted (Sampler, 1998; Makadok, 1999).

Within Bain-type industrial organisation, because industry structure determines firm conduct, conduct itself can largely be ignored as performance is determined only by structure (Phillips, 1974; Scherer, 1980; Hill and Deeds, 1996). In other words, firm conduct can be ignored as industry structure dominantly influences the strategic behaviour of the firms, which in turn determines their performance. In fact, most IO scholars' works focus on the examination of the structure - performance association, while ignoring the conduct (Scherer, 1980). For example, Phillips (1974) noted that firm performance depends upon industry structure alone; conduct is deterministic. Consequently, traditional IO theory concentrates on examining the effects of concentration, firm size, and entry barriers as the determinants of firm success (Hill and Deeds, 1996).

Summarising the SCP paradigm, Porter (1981), on the other hand, stated that the essence of the Bain-type industrial organisation is that firm performance in the market hinges critically upon the characteristics of the industrial environment within which the firm competes. Industry structure determines the behaviour or conduct of firm, whose joint conduct then determines the collective performance of the firms in the market. In this regard, structure pertains to the relatively stable economic and technical dimensions of an industry that provides the context in which competition occurs, and can be measured by the number of products and the cost of entry and exit. Conduct represents the firm's choice of key decision variables such as pricing, advertising, and quality. Finally, performance refers to individual firms and the economy as a whole (Porter, 1981; Barney, 2002).

Although most of the theoretical underpinning of the traditional IO theory was developed in the 1930s through to the 1950s, Porter's works in the 1980s signalled a restoration of the Bain-type IO theory. He applied IO principles to the field of strategic management, particularly in the areas of corporate strategy (e.g., Porter, 1980, 1985).

2.1.2 The Porterian View of Competition

In line with this strategic thinking, Michael Porter introduced important concepts to evaluate the relationship between the environment and firm performance. These concepts are the five forces framework, the generic strategies, and the value chain (Porter, 1980, 1985). In particular, Porter's early work of the five forces framework, which has dominated the practice of strategy for more than three decades, is deeply rooted in the traditional Bain-type IO economics.

(1) The Five Forces Framework

Similar to the IO economics, Porter (1980, 1985) focused much of his attention on industry structure. Viewing the degree of competition within an industry as being based on five forces, he suggested that it is the combined strength of the five forces that determine the profit potential of any industry and thus firms' relative opportunities for superior performance. Porter (1980, 1985) stated that the fundamental determinant of firm profitability is the attractiveness of the industry, which rests on the collective effect of the five competitive forces, considered as the formulation of a competitive strategy: (1) entrance of new competitors, (2) threat of substitutes, (3) bargaining power of suppliers, (4) bargaining power of buyers, and (5) the rivalry among the existing competitors (See Figure 2.2).

Figure 2.2: The Five Forces Framework

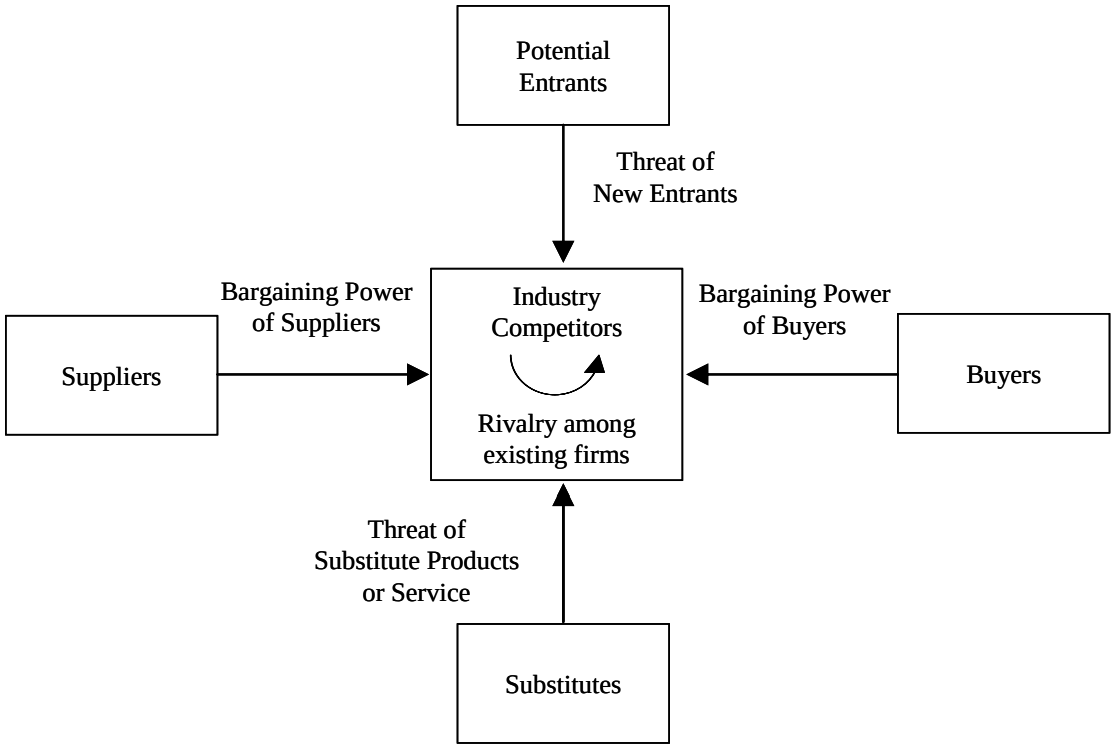

Source: Porter (1980, p. 4)

New entrants are firms that can enter an industry in the future. They are motivated to enter into an industry by the attractiveness of the above-normal economic profits that some incumbent firms in that industry may be earning (Porter, 1980). Their entry into the market should change the competitive equilibrium, bringing down the existing profitability, especially if the market demand becomes fully supplied (Barney, 2002). The main concept in the analysis of new entrants' threats is barriers to entry. Barriers to entry may be of several types, such as economies of scale, product differentiation, cost advantage, government regulation of entry, and the expected reactions of the current competitors (Porter, 1980; Barney, 2002). The higher the barriers to entry, the more likely firms within the industry will seek to tacitly collude to maintain those barriers, thus making it difficult for outsiders to gain entry. This preserves industry performance. On the other hand, the lower the barriers of entry, the higher the influx of new entrants bringing the new capacity and the wherewithal to gain market share. This erodes margins and in turn negatively impacts industry performance and ultimately firm performance (Hill and Deeds, 1996; Grant, 2002).

Substitutes represent another category of environmental threats because new products, if they meet the same customer needs, can replace the ones currently offered. If alternative materials, functions, or technologies are offered, the profitability of the industry can suffer (Porter, 1980). The use of substitute products should also be assessed in terms of their costs of implementation, such as expenses of training of employees, new tools to manufacture, and the redesign of products and processes (Porter, 1985).

Suppliers also represent an important competitive force. They can threaten the performance of firms in an industry by increasing the price of their supplies or by reducing the quality (Porter, 1980). High levels of threats in an industry are caused mainly by the following situations, which enable suppliers to manipulate prices, quality, and conditions of trading: when a small number of firms dominate the supply market, when suppliers offer unique, highly differentiated products, when effective substitutes do not threaten the suppliers, when suppliers are able to integrate vertically forward, and when a firm is not an important customer to its suppliers (Barney, 2002). On the other hand, if suppliers are plentiful, choice and bargaining power over price tend to fall in the favour of firms in the industry. This positively impacts the overall industry performance (Bennett, 1996).

The force of buyers can also influence the profitability of an industry's firm through reasons that are similar to the power of suppliers. The buyers' powers, when exerted, can reduce firms' profit margins as they have the ability to compel firms to reduce prices and increase service levels (Porter, 1980). In certain situations, the threat of buyers can prove to be considerably pertinent. For example, when there are few buyers, when products and services to be sold are standard and/or present little differentiation, and when buyers can pursue backward vertical integration (Barney, 2002). Furthermore, a problem potentially persists when the threat of substitution (of products and services) is high. In such situations, higher bargaining power is placed in the hands of the buyers, at the expense of the producers. This can drive competitive price wars, resulting in lowering of the overall profit potential (Brandenburger and Nalebuff, 1995, 1996).

Rivalry in an industry places firms in perilous situations and threatens firms by reducing their economic profits (Porter, 1980; Barney, 2002). A high competitive intensity also leads to higher costs of market development (Porter, 1980, 1985). These levels of rivalry result in actions such as price-cutting, intense advertising campaigns, and other rapid competitive moves (Porter, 1980; Barney, 2002). The attributes of an industry that can generate high levels of rivalry are appointed: large numbers of competing firms, competing firms with the same size and the same influence, slow industry growth, lack of product differentiation, and productive capacity added in large increments (Barney, 2002).

The abovementioned five forces are the key determinants of long-term industry advantage and profitability (Porter, 1980, 1985). In other words, the strength of each of the five competitive forces is a function of industry structure, and it is the industry structure that determines industry profitability (Porter, 1990). Furthermore, because firm conduct is constrained by external structural forces, the favourability or unfavourability of the profit potential of the firm is influenced by the attractiveness of the industry structure within which it competes (Porter, 1985; Spanos and Lioukas, 2001). Similar to the Bain-type IO theory, the five forces of industry structure affects the overall industry performance, and the performance of firms within the industry.

An extension to Porter's five forces framework can be found in the works of Brandenburger and Nalebuff (1995, 1996). Using game theory, they developed the concept of the value net model for analysing an organisation's competitive environment, and provided an important contribution to Porter's framework by introducing the sixth force, known as complementors. Complementors refer to firms

that produce products and services, which complement or support those of another firm and therefore add value to the industry.

According to the Porterian view of competition, competitive strategies could be designed to neutralise these competitive forces, so that firms can either maintain or create above-normal returns (Porter, 1980, 1985). Porter (1985) posited that a firm is usually not a prisoner of its industry structure. Firms, through their strategies, can influence these forces. If firms can shape structure, they can fundamentally change an industry's attractiveness, for better or for worse. In other words, the external industry can be influenced by firm actions. Porter's framework clearly recognises the role of firm conduct in influencing its own destiny. Firms must choose a strategy with which they can create a defendable position against industry rivals, and the ability to achieve and sustain competitive advantage over rivals largely rests on their ability to either become more cost effective or become more unique (Porter, 1985, 1996).

(2) The Generic Strategies

Porter's (1980, 1985) works place special emphasis on firm conduct, particularly with respect to strategy development and strategic choice within the framework of industry structure. Porter (1980, 1985) argued that firms must choose among three generic strategies: (1) cost leadership, (2) differentiation, and (3) cost or differentiation focus (See Figure 2.3). These strategies can allow firms to reach profitability above or below the average of the industry. The competitive advantage through cost or differentiation depends on the industry structure and results from firms' ability to deal with the five forces better than their rivals (Porter, 1985). In other words, the objective behind these strategies is to provide firms with a defined position that they

can best defend themselves against the competitive forces, so that they can influence the forces in their favour.

Figure 2.3: The Generic Strategies

Competitive Scope	Competitive Advantage: Lower Cost	Competitive Advantage: Differentiation
Broad	Cost Leadership	Differentiation
Narrow	Cost Focus	Differentiation Focus

Source: Adapted from Porter (1985, p. 12)

First, the logic of cost strategy is that firms seek to become the lowest cost generator in an industry. The cost leaders usually have large scope and supply, while the sources of low costs typically include economies of scale, patented technology, preferential access to raw materials, and other factors. Low cost producers usually sell a standard product, and they place considerable importance in gaining scale or absolute cost advantage from all sources (Porter, 1985).

Second, the logic of differentiation strategy is that firms acquire advantages over their rivals through the offering of better products with highly estimated values to the customers. Differentiation can be based on a variety of factors, such as the durability of products, the delivery system, and image attributes (Porter, 1985).

Finally, the logic of focus strategy is based on choosing a narrow competitive environment within the industry. Firms select a segment or a group of segments in the industry and seek to gain competitive advantage in that target segment, either through a cost advantage standpoint or through a differentiation advantage. This approach aims at the exploration of distinct cost behaviours or special requirements of buyers in specific segments (Porter, 1985).

Porter (1980, 1985) claimed that these strategies are mutually exclusive and at least non-complementary. Firms should choose one of these alternative strategies, which represent different ways of achieving competitive advantage. Porter (1985) stated that firms that attempt to pursue multiple generic strategies end up trapped in their own web and result in that they have no competitive advantage and below average performance. Firms become 'stuck in the middle' for one of two reasons. First, they may fail to successfully pursue any type of the generic strategies. Second, firms can become stuck in the middle by trying to pursue multiple generic strategies simultaneously. More recently, Thompson and Strickland (2008) expanded Porter's generic strategies from three to five: overall low-cost provider strategy, broad differentiation strategy, best-cost provider strategy, focused low-cost strategy, and focused differentiation strategy. In the same vein, they proposed that generic strategies are one dimensional, and firms should seek to develop competitive advantage based on either differentiation or cost.

The specific actions that are necessary for the implementation of each generic strategy vary depending on different industries and the feasible strategies within each industry. The notion of generic strategies requires that the necessary skills, organisational structure, incentive systems, and leadership style for the success of a low cost firm are

contrary to those of the differentiation strategy (Porter, 1985). The concept of generic strategies changes the concentration on strategic planning when compared with the rivals in the same industry. Porter (1985) argued that generic strategies should be the core of a strategic plan. These strategies specify a firm's fundamental approach to look for the competitive advantage and supply a clear context for decision making in each functional area.

(2) The Value Chain

With competitive strategies and scope defined, the configuration of activities should then be analysed and adapted with the help of the value chain (Porter, 1991). The way such activities are performed contributes to the strategies of cost or differentiation. The value chain allows deconstructing a firm into its strategic relevant activities in order to enable a more detailed understanding of the behaviours of costs or differentiation potentials (Porter, 1985, 1991). Porter (1985) divided the activities of a firm into nine generic categories, which are classified into two major groups: primary and support activities. Primary activities concern the creation of products, their sale and transfer to the customers, and their post-sale assistances. These primary activities comprise inbound logistics, operations, outbound logistics, marketing and sales, and service. Support activities assist the primary activities and themselves by providing supplies, technology, human resources, and other functions to the firm (Porter, 1989). Figure 2.4 intends to represent that profit margins are the result of the way a value chain is managed.

Figure 2.4: The Value Chain

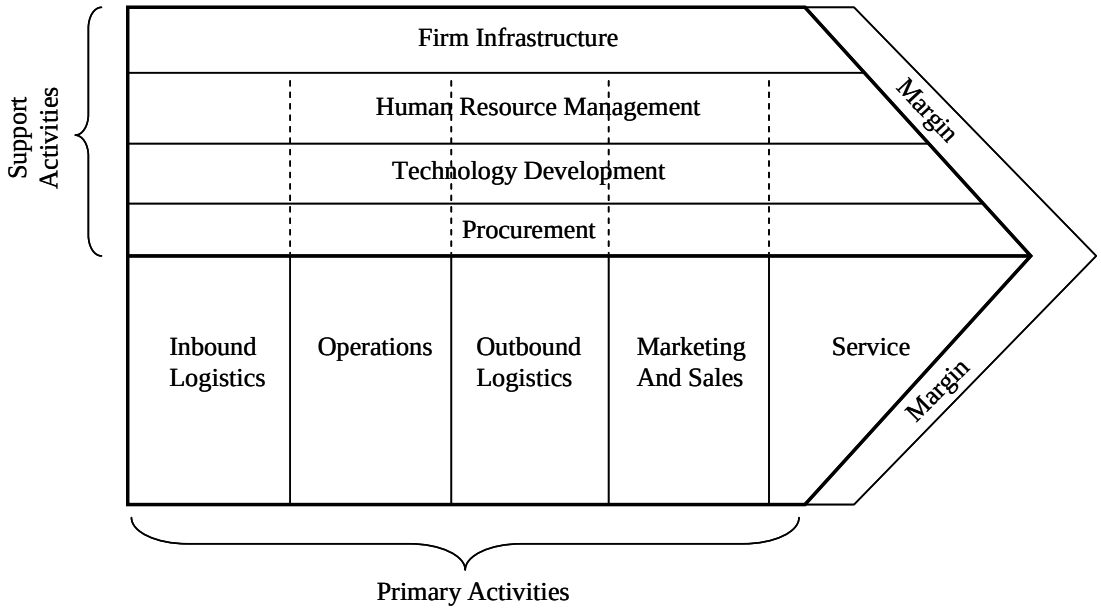

Source: Porter (1985, p. 37)

The analysis of the value chain should also include an assessment of the relationships between internal activities and those of suppliers and buyers in order to improve on the existing interfaces (Porter, 1985, 1991). Thus, the optimisation of the entire value chain through upstream and downstream value should increase the competitive advantage of the whole value system (See Figure 2.5).

Figure 2.5: The Value System

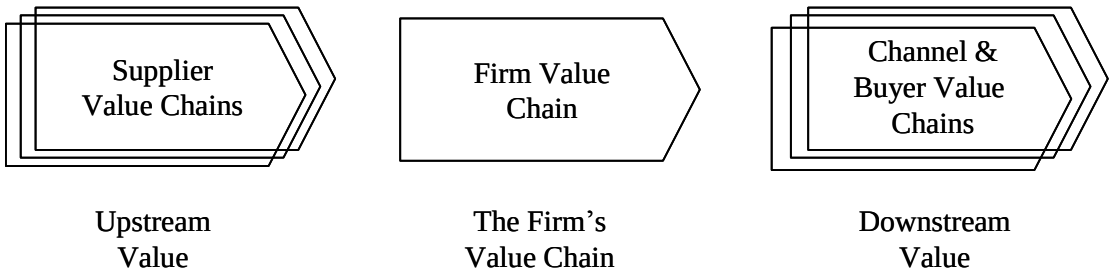

Source: Adapted from Porter (1991, p. 103)

The Porterian view of competition, including five forces framework, generic strategies, and value chain, is associated with the positioning school of strategic management identified by Mintzberg et al. (1998). Makhija (2003) referred to this perspective as the market-based view of the firm (MBV). According to the Porterian view of competition, the external environment maintains a central role, influencing with considerable impact the firms' strategies and their ability to gain successful positions in the markets. Strategy is the result of a one-way interaction between industry and firms, from the external to the internal environment, in line with a strong pattern of structure - conduct - performance. The Porterian view of competition brings an industrial organisation economics view to strategy formulation and represents an evolution in strategic management literature. The significant contribution of Porter's works has had a deep and pervasive influence on business theory and practice, and many scholars from diverse fields have examined or made reference to his work (Brandenburger, 2002; Stonehouse and Snowdon, 2007).

2.1.3 Criticisms of the Industry-Based Theory

First introduced by Mason and Bain in the 1930s and 1950s, and adopted and applied to the field of strategic management by Porter in the 1980s, the focal emphasis of the industry-based theory is the external environment or industry structure. Industry structure is seen to determine an industry's performance, which ultimately impacts firm success. Much of the economic tradition has not only influenced generations of scholars, but has formed a basis of understanding in which firms formulate strategy and compete in given markets. Although the SCP paradigm has brought significant

insights into strategic management and other business disciplines, the industry-based theory has faced many criticisms.

The SCP paradigm has been criticised by several scholars because of the main focus on external industry factors instead of a firm's internal factors such as resource configuration and other possible factors of success (Hunt, 2000; Spanos and Lioukas, 2001; Aktouf et al., 2005). The SCP explains the differences in firm performance within the industry environment (five forces) and the generic strategies. These frameworks put the focus clearly on phenomena at the industry level, while the intra–organisational processes are considered as a secondary level by the value chain (Collis and Montgomery, 1995). Since external analyses are used to evaluate a firm's competitive position, the SCP places little emphasis on the idiosyncratic features of a firm and adopted two underlying assumptions (Barney, 1991). First, firms in an industry are similar in regards to the resources they control (resource homogeneity). Second, it is assumed that if there is some resource heterogeneity in an industry and if this heterogeneity leads to superior performance, rivals will soon acquire similar resources and the competition will become balanced. These assumptions are refuted by the resource-based theory, which considers the heterogeneity and immobility of resources as sources of superior competitive advantage (Barney, 1991; Peteraf, 1993; Collis and Montgomery, 1998; Barney and Arikan, 2005; Barney and Clark, 2007; Becerra, 2009).

In addition, the major critique against Porter's generic strategy typology is the argumentation that cost leadership and differentiation are not necessarily alternative, mutually exclusive strategies (Hall, 1980; Miller, 1992; Miller and Dess, 1993; Kim

et al., 2004; Stonehouse and Snowdon, 2007). Porter (1985) suggested that every firm must make a choice about which aspect of competitive superiority to pursue between low cost and differentiation. He pointed out firms that attempted to pursue multiple generic strategies as 'stuck in the middle', and the end result is that they have no competitive advantage and below average performance. However, empirical research revealed that cost leadership and differentiation can coexist. Studies by White (1986) and Wright et al. (1991) supported the notion that firms can excel both at low cost and differentiation. Miller (1992) found that firms were able to pursue a combination of cost leadership and differentiation strategies without any penalty to financial performance. Likewise, in their study based on the profit impact of market strategy (PIMS) database, Miller and Dess (1993) found hybrid strategies not only feasible, but also profitable. Recent studies by Kim et al. (2004) and Kim and Mauborgne (2005) also supported this notion and contended that firms have to pursue low cost and differentiation simultaneously. In today's business environments in which customers are increasingly sophisticated and demanding, supplying high quality products and service that meets or exceeds customer needs at lower cost is paramount (Kim and Mauborgne, 2005).

Another criticism of the industry-based theory concerns the very essence of the dynamics of competition itself. The SPC paradigm is primarily related to mature markets, where the market structure is stabilised. For example, Porter's theories are based on the economic situation in the nineteen eighties. This period was characterised by strong competition, cyclical developments, and relatively stable market structures. Hence, these theories cannot explain or analyse today's dynamic changes that have the power to transform whole industries (Hamel and Prahalad, 1994;

Grant, 2002; Acedo et al., 2006). Nowadays, the rate of environmental change has increased dramatically. New technology and increased globalisation have created a competitive environment with many challenges facing firms wanting to succeed in the twenty-first century (Slater, 1996; Prastacos et al., 2002). Firms must be able to continuously adapt to ever-shifting environments, and other means of acquiring competitive advantage must be found (Slater, 1996; Teece, 1997). In light of the rapidly changing business conditions, many scholars have argued that firms would be prudent to focus their attention on the strategic resources that they might acquire, develop, and deploy as part of a market strategy, rather than focusing too much attention on the structural characteristics of industries that might restrict or prohibit their ability to compete in a given market (Barney, 1991; Teece, 1997). The more dynamic a firm's external environment is, the more likely internal firm factors play a significant role in the long-term strategy foundation (Fahy and Smithee, 1999; Grant, 2002; Acedo et al., 2006).

These criticisms faced by the SCP led to a counter–movement by shifting emphasis from external industry factors to internal firm-level characteristics. This resulted in the emergence of the resource-based view of the firm (RBV), which has had considerable influence on the field of strategic management and has made a significant contribution to the modern theoretical basis for explaining why some firms are more successful than others.

2.2. The Resource-Based View of the Firm

Strategic management has primarily focused on business concepts that affect firm performance (Barney and Arikan, 2005). Many early strategy scholars, such as Penrose (1959), Ansoff (1965), and Andrews (1971) were mainly interested in firms' internal resources and their contributions to firm success. In the 1970s and 1980s, the focus shifted toward the external factors. Industrial organisation economics (IO) or the SCP paradigm, which consider the structural aspects of the industry and the competition within industry, became dominant (Hoskisson et al., 1999). This was especially due to Porter's (1980) work. The focus shifted back to inter-firm resources during the 1980s and 1990s when the framework of the resource-based view of the firm (RBV) was developed (Hoskisson et al., 1999; Acedo et al., 2006).

The RBV's roots lie in the conventional study of Ricardian economics, the study of the anti-trust implications of economics (Ricardo, 1817), and particularly the work of Penrose (1959), known as Penrosian economics (Barney and Arikan, 2005). In the 1980s and early 1990s, the seminal works of Rumelt (1984), Wernerfelt (1984), Dierickx and Cool (1989), Prahalad and Hamel (1990), Barney (1991), Collis (1991), Conner (1991), Grant (1991), Amit and Schoemaker (1993), and Peteraf (1993) created the resource-based view of the firm. Since then, the RBV has developed into a major paradigm in studying competitive strategies in the field of strategic management and has received attention from different disciplines, such as marketing and international business (e.g., Day, 1994; Srivastava et al., 1998; Peng, 2001; Srivastava et al., 2001; Morgan et al., 2004; Greenley et al., 2005; Kaleka, 2011).

The RBV is a theory that highlights the importance of firm-specific resources in explaining firms' competitive advantage and superior performance (Wernerfelt, 1984; Barney, 1991; Collis and Montgomery, 1998; Becerra, 2008; Kraaijenbrink et al., 2010). Firms exist because of the opportunity to seize rents created by distinctive resources (Barney, 2001; Peteraf and Barney 2003; Becerra, 2009). The key concepts in the RBV literature therefore are illustrated in order to develop an integrated framework for the study.

This section begins with a review of the literature regarding the main themes of the resource-based theory, which is followed by a review of the different classifications of firm resource endowments. Finally, the notion of the resource-based view of competitive advantage and the missing link in the RBV framework are presented.

2.2.1. The Principle Concept of the Resource-Based View

The RBV brings the idea of resources and heterogeneity onto centre stage in the analysis of differential firm performance. It rests on the belief that competitive advantage does not depend on market and industry structures but on internal resources (Wernerfelt, 1984; Peteraf and Barney, 2003; Barney and Arikan, 2005; Newbert, 2007). In other words, the origins of competitive advantage are in the valuable resources the firm possesses. Thus, the RBV is a perspective on strategic management with an emphasis on internal analysis and an attempt to address a perceived imbalance with the SCP paradigm of industrial organisation economics, which states that competitive advantage is derived from the external environment (e.g., Bain, 1956; Porter, 1980, 1981, 1985).

The SCP paradigm views the firm as a bundle of strategic activities and focuses on market and competition for accounting of the firm's strategy (Porter, 1980, 1985, 1991). Firm success is a function of the attractiveness of the industry in which a firm competes and its relative position in that industry. A firm can be thought of as a collection of activities, and the firm's strategy then determines its configuration of activities and how they interrelate. According to the SCP theory, the role of resources becomes meaningful only after strategies have been chosen (Porter, 1991). In other words, the demands of resources are planned from the observations of the market. On the other hand, the RBV paradigm posits that resources, rather than market and industry structures, are the most critical determinants of a firm's success (Wernerfelt, 1984; Peteraf and Barney, 2003; Sirmon et al., 2007). The most important feature of the RBV is its reliance on internal resources as the unit of analysis for strategy,

including any financial, human, physical, and intangible resources that the firm may use to conceive of and implement their strategies (Barney and Arikan, 2005). The industry in which the firm is operating becomes secondary when defining its nature, while the bundle of resources available to the firm dictates the direction towards which the firm can grow and the industries in which it can compete (Becerra, 2009). Available resources determine the scope of activities inside and outside the discrete set of productive opportunities available to the firm (Sirmon et al., 2007; Becerra, 2009).

Drawing upon the RBV, firms are bundles of resources (Wernerfelt, 1984; Collis and Montgomery, 1998; Becerra, 2008, 2009). These resources are heterogeneous and imperfectly mobile (Barney, 1991; Barney and Arikan, 2005; Barney and Clark, 2007). Resources, if they are distinctive or superior relative to rivals, constitute the firm-specific assets and capabilities that are the basis of firms' competitive advantage (Grant, 1991; Collis and Montgomery, 1998; Fahy and Smithee, 1999; Hoopes et al., 2003; Newbert, 2007). The fundamental assumptions that differentiate the RBV theory from other strategic management theories are resource heterogeneity and resource immobility (Barney, 1991; Barney and Arikan, 2005). Heterogeneity of available and potential resources gives each firm its unique characteristics. Some firms may possess valuable resources that enable them to develop and implement superior strategies when compared to those of competitors (resource heterogeneity), and these distinctions in the availability of resources may be continuous (resource immobility). The meaningful idiosyncratic combinations of firm-level resources are believed to contribute significantly to the generation of the rents and the security of long-term growth (Collis and Montgomery, 1995; Barney and Arikan, 2005; Barney

and Clark, 2007; Becerra, 2009). Thus, the focus of attention of the firm shifts from building market power to leveraging unique resources that can be used efficiently and effectively for competing in the competitive market environment.

The RBV does not deny the existence of other sources of superior performance such as scale economies and first-mover advantage (Peteraf and Barney, 2003). On the contrary, these can, to some extent, be explained by the resources of the firm. For example, Barney (1991) explained the first-mover advantage, based on the resource-based view. He argued that the first-mover advantage does occur, but the requirement is that firms in the industry must be heterogeneous in terms of the resources they control. If competing firms have identical resource profiles, it is not possible for any firm to obtain competitive advantage from moving first. This would require insights about the opportunities associated with implementing a strategy before competing firms. This is possible solely in the case of resource heterogeneity. In addition, barriers to entry and mobility only exist when competing firms are heterogeneous in terms of strategically relevant resources they control (Barney and Arikan, 2005).

Various definitions of resources have been proposed in the strategic management literature. The key concepts of the RBV include such concepts as resources, assets, capabilities, core competencies, and dynamic capabilities (Fahy and Smithee, 1999; Rugman and Verbeke, 2002; Hoopes et al., 2003). Wernerfelt (1984), who coined the term ‘the resource-based view of the firm’, stated that a resource is anything which could be thought of as a strength or weakness of a given firm. Examples of resources are in-house knowledge of technology, employment of skilled personal, machinery, efficient procedures, and capital. Collis (1991) argued that resources include all assets,

capabilities, organisational process, information, technologies, and knowledge controlled by firms that enable them to conceive and implement strategies that improve their efficiency and effectiveness.

Prahalad and Hamel (1990) defined core competencies as the collective learning in the organisation, particularly how to coordinate diverse production skills and integrate multiple streams of technologies. Core competencies represent the integration of a variety of individual capabilities that must be coordinated to achieve a desired end-state. Amit and Schoemaker (1993) pointed out that capabilities refer to a firm's ability to exploit and combine resources through organisational process in order to accomplish its targets. Teece et al. (1997) referred to these capabilities as dynamic capabilities, which are the set of specific and identifiable processes and routines that allow firms to build and reconfigure internal and external resources in pursuit of sustained competitive advantage.

In general, Collis and Montgomery (1998) and Fahy and Smithee (1999) classified these resources into three broad categories, tangible assets, intangible assets, and capabilities, which help to explain how various components of resources fit into an overall structure. Tangible and intangible assets can serve as inputs to organisational processes, whereas capabilities in organisational processes transform inputs into outputs of greater worth (Grant, 1991; Amit and Schoemaker, 1993; Teece et al., 1997; Collis and Montgomery, 1998).

The RBV assumes that a firm somehow develops such resources internally. These resources are called strategic resources, which form the basis of the firm' sustainable

competitive advantage and influence the direction of firm growth (Collis and Montgomery, 1998; Becerra, 2008). The RBV proposes that resource selection and deployment are a function of both internal firm decision making and external industry factors. Economic rationality guide managerial choices of the firm on efficiency, effectiveness, and profitability (Conner, 1991; Collis and Montgomery, 1998). External industry factors, such as intensity of competition, industry and product market structure, influence the selection and deployment of firm resources. The recognition of opportunities and the ability to organise resources into the firm and the creation of heterogeneous output that are superior to the market will thus drive firms to select and deliver values appropriate to the firm (Becerra, 2009). The firm can expand efficiently into activities that draw upon existing resources rather than into activities with no relation to current resources. Part of the efficient expansion of the firm is assigning managers and employees to where they have highest productivities which would help to accelerate the growth of the firm (Collis and Montgomery, 1998; DiBenedetto and Song, 2003; Sirmon et al., 2007; Becerra, 2009).

In the resource-based theory, managers are in the key position to control the performance of the firm by utilisation of the resources that firm possesses. Managers must be able to use these resources to achieve a superior return and be able to recognise when a resource is no longer of benefit (Penrose, 1959; Collis and Montgomery, 1998; Augier and Teece, 2009). Managers' inabilities to effectively utilise the resources can set limits to firm growth (Amit and Schoemaker, 1993; Becerra, 2009). This is consistent with Penrose's (1995) argument that managerial abilities constitute the limiting factor for firm growth. Hence, the RBV gives managers a unique role of identifying and developing those resources that are

potential sources of sustainable competitive advantage, thereby developing superior performance.

Resource-based variations among firms can help explain performance differences as a result of the outputs that can emerge from unique resources. Unique resources of a firm account as important factors for attaining resourceful firm performance, which give rise to imperfect competition and the attainment of above normal returns (Wernerfelt, 1984; Becerra, 2008). The firm's ability to sustain above average performance relies upon the endowment of its resources, which should be of great value, unique or rare, difficult to imitate, and non-substitutable (Barney, 1991). It is known as the VRIN framework. Value refers to the resource enabling a firm to create or implement strategies that improve its efficiency, and rarity means that the resource cannot be possessed by a large number of competitors. Imperfectly imitable refers to the feature that despite their efforts, firms that do not possess the resources cannot obtain them by imitation, and non-substitutability means that firms cannot substitute similar resources for resources they cannot imitate. This framework is later replaced by the VRIO framework, in which non-substitutability is substituted by the criterion of organisational embeddedness (Barney, 2002; Barney and Clark, 2007). Barney and Clark (2007) stated that the resources must be embedded in an organisation in ways that enable them to realise their strategic value and thereby make strategically valuable resources imperfectly mobile.

These critical resources are important for their value generating ability and their scarcity (Peteraf and Barney 2003). The former means that they are vital for the firm's effort to generate greater economic value. If critical resources do not exist, then the

value could disappear. The critical resources are also the limiting factors in determining how much demand the firm is able to satisfy. They are often scarce, because the supply of this kind of resources might be insufficient. Scarcity of these superior factors affects the competition as more and more marginal factors are drawn into production. The scarcity of critical resources might be only temporary. However, sometimes they are permanent due to the inelasticity of supply (Peteraf and Barney 2003). Furthermore, Peteraf and Barney (2003) stressed upon the importance of the rent generating ability of resources. The superior critical resources allow a firm to function more efficiently by lowering cost per item produced and receive higher benefits from customers. This situation produces greater net benefits, allowing the firm to gain competitive over competitors in the same market. Such scenarios tend to sanction the firm's attainment of a higher residual value when compared to its rivals.

The key terms in the RBV are economic rent and competitive advantage. The economic rent is a rent-generating ability of the resources (Collis and Montgomery, 1998; Peteraf and Barney, 2003; Barney and Clark, 2007). It is determined as a payment to an owner of a factor of production in excess of the minimum required to induce that factor into employment (Barney and Arikan 2005). In other words, rent is the surplus of revenue over the real or opportunity cost of resources in generating that revenue (Grant 1991). On the other hand, competitive advantage is defined as the situation in which a firm is able to create more economic value than the marginal (breakeven) competitor in its product market (Peteraf and Barney, 2003; Barney and Clark, 2007).

A simple example of this situation has been defined by Barney and Clark (2007). Firms A and B are competing firms. Firm A is able to create 180 and firm B 150 monetary units of economic value per unit of output. Firm A and firm B both deliver the same level of benefits to the customers (100 monetary units). However, firm A has 80 monetary units of residual value, i.e. value that is left over after customers have got their share of total value, and firm B has residual value of 50 monetary units. Now, firm A has positive differential in residual value of 30 monetary units over firm B (80-30). Hence, firm A has a competitive advantage over firm B, and this advantage provides a protective cushion for A against competition from B. Accordingly, economic rent can also be defined as a return on the factor in excess of its opportunity cost. In their view, competitive advantage is seen as an intermediate outcome in the path leading from critical resources to economic rents. Therefore, in order to create competitive advantage, a firm must produce greater net benefits through superior products and services at lower costs than its competitors (Collis and Montgomery, 1998; Peteraf and Barney, 2003; Barney and Clark, 2007).

As long as a firm is able to gather co-specialised resources and bundle them together, it should be able to extract some profits from the greater value they can generate (Peteraf and Barney 2003; Barney and Clark, 2007; Becerra, 2009; Kraaijenbrink et al., 2010). However, profits should decrease when value specificity is reduced and the resources become commoditised in terms of generating similar marginal value across firms. In that case, their compensation will become standard in line with its market value and specificity profits would disappear (Becerra, 2008, 2009). A firm should protect and deploy these specialised resources in a way that provides it with

sustainable competitive advantage and thereby superior return (Amit and Schoemaker, 1993; Barney, 2001; Augier and Teece, 2009; Becerra, 2009).

The contributions of the RBV in explaining variations in business performance are considerable compared to the explanatory value of the SCP theory. It can determine sustainable profitability differences that cannot be explained under industry conditions. Using a four-year longitudinal data from the accounting profits of American manufacturing firms, Rumelt (1991) found that differences in firm profitability are not based on the structural characteristics of an industry but rather on the unique endowments of resources in individual firm. He reported that industry effects account for 4 percent of profitability variance, whereas firm-level effects account for 46 percent of the variance. In other studies, Lopez (2001) found that industry conditions explained 3 percent, and the firm's resources explained 36 percent of performance variation. Later research also reported that industry effects explained 5 percent, and the firm-specific resources explained more than 40 percent of profitability variation (Claver et al., 2002). Thus, the specialised resources that firms possess are the fundamental determinants of superior performance.

2.2.2. Classification of the Resource-Based View

Firm's resource endowments can take a variety of forms, and there are many classifications in the RBV literature (See Table 2.1).

Table 2.1: A Classification of the Firm's Resource Pool

	The Firm's Resource Bundle		
Author	**Tangible Assets**	**Intangible Assets**	**Capabilities**
Penrose (1959)	Resources		
Barney (1991)	Resources		
Grant (1991)	Resources		Capabilities
Collis and Montgomery (1998)	Tangible Assets	Intangible Assets	Capabilities
Hall (1992)		Intangible Assets	Intangible Capabilities
Hall (1993)		Assets	Competencies
Prahalad and Hamel (1990)		Core Competencies	
Selznick (1957)			Distinctive Competencies
Itami (1987)			Invisible Assets
Amit and Schoemaker (1993)			Intermediate Goods
Irvin and Michaels (1989)			Core Skills

Source: Adapted from Fahy and Smithee (1999, p. 9)

Penrose (1959) identified three broad sets of resources that encompass the resource domain of the firm: managerial or organisational resources, entrepreneurial resources, and technological resources. Itami (1987) built on the work of Penrose (1959) concerning corporate growth and moved the arguments forward by emphasising the role of invisible assets of a firm. Invisible assets include intellectual property rights of patents and trademarks, trade secrets, proprietary data files, personal and organisational networks, reputation, and culture.

According to Barney (1991), resources can be classified into three categories: physical capital resources, human capital resources, and organisational capital resources. Physical capital resources comprise of physical technology, plant and

equipment, geographic location, and access to raw materials. Human capital resources include training, experience, judgment, intelligence, relationships, and the insights of individual managers and employees in the organisation. Organisational capital resources comprise culture, formal structure, formal and informal planning, controlling, and coordinating systems as well as informal relations among groups within organisations and between the firm and those in its environment. Grant (1991) further developed Barney's (1991) resource typology by adding technological resources, financial resources, and reputation as additional categories. He claimed that competitive advantage stems from a firm's internal resources and capabilities and also made a distinction between resources and capabilities. Grant (1991) defined resources as inputs to the production process, where only a few are ever productive. Capabilities are defined as the capacity of a team to perform certain specialised tasks or activities. He argued that while resources are the sources of a firm's capabilities, capabilities are the main sources of its competitive advantage.

Prahalad and Hamel (1990) introduced the concept of core competencies, which specifically highlighted the key role of specific capabilities in gaining long term competitive advantage. They denoted core competencies as the collective learning of the firm, with specific emphasis on the coordination of diverse production skills and integration of different functional capabilities. According to them, core competencies represent the sum of learning across individual skill sets and individual organisational units. Core competencies require collective organisational learning, involvement and commitment to integration among various functions and departments of the corporation. While functional capabilities generate value by deploying resources, competencies add greater value as they expand the boundaries of capabilities. They

result from synergies among capabilities. To compete for the future, Hamel and Prahalad's (1994) view of strategy requires industry foresight and competence leveraging. Industry foresight implies that managers should develop long-term strategic intent by questioning what new types of benefits should be provided to customers and what assets and capabilities should be developed as to offer those benefits. Competence leveraging is then the coordinated use of firm's assets and capabilities to create customer value.

Collis and Montgomery (1998) classified the firm's resource bundle into three broad categories: tangible assets, intangible assets, and capabilities. Tangible assets refer to resources that appear on the firm's balance sheet, such as financial capital, real estate, production facilities, and raw materials. Intangible assets refer to resources that include culture, knowledge, firm reputation, for example. Capabilities refer to resources that are not factor inputs, i.e., tangible and intangible assets. They are complex combinations of assets, people, and processes that firms employ to transform inputs into outputs, such as product development capabilities.

The resource frameworks discussed above show preliminary groupings of elements in a logical order and depict how various components fit into an overall structure. There is still considerable terminological confusion with the RBV theorists (Fahy and Smithee, 1999; Rugman and Verbeke, 2002; Hoopes et al., 2003). For example, Grant (1991) used the term 'resources' and 'capabilities', and Prahalad and Hamel (1990) utilised 'core competencies'. In addition, capabilities have proved more difficult to delineate, and they can be described as 'distinctive competencies' (Selznick, 1957), 'invisible assets' (Itami, 1987), 'core skills' (Irvin and Michaels, 1989), 'intermediate goods' (Amit and Schoemaker, 1993), or 'competencies' (Hall, 1993). The RBV is

not a single or integrated perspective, but rather arises from a set of research contributions published mainly since the 1980s. Nevertheless, Fahy and Smithee (1999) provided a useful classification system which integrates the view of many leading authors as illustrated in Table 2.1 (e.g., Selznick, 1957; Prahalad and Hamel, 1990; Collis and Montgomery, 1998; Grant, 1991). This classification system helps explain how various components of the RBV perspective fit together. Similar to Collis and Montgomery's (1998) typology, Fahy and Smithee (1999) also classified the firm's resource bundle as (1) tangible assets, (2) intangible assets, and (3) capabilities.

All groups of resources are emphasised by the RBV as a source of heterogeneity of firm performance (Barney, 1991, 2001). However, the RBV claims that not all resources are of equal importance in terms of achieving competitive advantage and superior performance. Those differences are attributed mainly to the issues of how high the barriers to resource imitation are and how durable the resources are (Barney, 1991, 2001). Resources can be both tangible and intangible. Tangible assets are easy to duplicate by competitors, and hence they are claimed to be relatively weak sources of competitive advantage (Barney, 1991, 2001; Carmeli, 2004). On the contrary, intangible assets and capabilities, because of relatively high barriers to duplication, are claimed to be more important sources of heterogeneity of performance than tangible assets (Srivastava et al., 2001; Carmeli and Tishler, 2004; Newbert, 2007).

2.2.3. The Resource-Based View of Competitive Advantage

The pursuit of competitive advantage has been a major conceptual focus of strategic management (Peteraf and Barney, 2003; Barney and Clark, 2007). Although there have been various theoretical frameworks to explain competitive advantage, the RBV has found favour over the last decades as a key contributor to the theories concerning the development and delivery of competitive advantage (Fahy and Smithee, 1999; Newbert, 2007; Becerra, 2009). While the SCP considers that competitive advantage is derived from the industry structure, the competitive dynamics, and the market, the RBV focuses on the firm and the need the firm has to develop and combine resources to achieve competitive advantage (Collin and Montgomery, 1998; Newbert, 2007; Lockett et al., 2009; Kraaijenbrink et al., 2010).

The importance of resources for a firm's competitive advantage was first recognised by Penrose (1959). Following Selznick's (1957) work on distinctive competencies, Penrose (1959) argued that the firm consists of a collection of productive resources, and these resources can contribute to competitive advantage when they are used in a manner whereby their potentially valuable services are available to and used by the firm. Andrews (1971) further developed the Penrosian ideas by arguing that the firm's resources, which are superior relative to those of rivals, may become the sources of competitive advantage if they are appropriately matched to environmental opportunities. Viewed this way, competitive strategy starts properly, not with an assessment of the firm's external environment, but with the firm's resources (Barney, 2001; Acedo et al., 2006). The RBV continues to build upon these ideas associated with the ability to acquire and maintain resources as the key to competitive advantage,

where competitive advantage ultimately translates into increased profits, market share, customer satisfaction, and success for the firm (Wernerfelt, 1984; Barney, 1991; Peteraf and Barney, 2003; Newbert, 2007; Becerra, 2008, 2009).

Numerous resources exist in a single firm. However, they gain value only when they exhibit certain characteristics. The RBV identifies the characteristics of these resources and explains their impact on the firm's competitive advantage. According to Barney (1991), the firm's ability to achieve superior competitive advantage and performance depends on valuable, rare, inimitable, and non-substitutable resources (the VRIN framework). Value is defined as resources either exploiting opportunities or neutralising threats to the firm, and rarity is defined as being resources that are not currently available to a large number of the firm's current or future competitors. Inimitability refers to the difficulty for other firms to copy or reproduce certain resources for their own use. Finally, non-substitutability means that alternative resources cannot be used by competitors in order to replicate the benefit. This framework is later replaced by the VRIO framework, in which non-substitutability is substituted by the criterion of organisational embeddedness (Barney, 2002; Barney and Clark, 2007). Barney and Clark (2007) stated that the resources must be embedded in an organisation in ways that enable them to realise their strategic value and thereby make strategically valuable resources imperfectly mobile.

Barney's conceptual model is presented in Figure 2.6. The key theoretical contribution made by Barney (1991) constitutes the RBV's main prescription (Newbert, 2007).

Figure 2.6: Barney's Conceptual Model of the Resource-Based View

Source: Newbert (2007, p. 123)

Peteraf (1993) subsequently added two additional conditions to understand the rent-generating ability of resources: *ex ante* limits to competition and *ex post* limits to competition.

Ex ante limits to competition: Peteraf (1993) argued that in order for a firm to attain competitive advantage, *ex ante* limits to competition must exist. As an example, if two or more competing firms in an industry know prior to the acquisition of a given resource that the resource will endow them with an inimitable resource position over current and future rivals, the firms will compete for those resources in such a way that any anticipated returns will be bargained away. Thus, resources have to be acquired below their discounted net present value in order to yield rents. Otherwise, future rents will be fully absorbed in the price paid for the resources (Foss, 1997).

Ex post limits to competition: To sustain economic rents, *ex post* limits to competition must exist (Peteraf, 1993). *Ex post* limits to competition are the forces that limit competition and rent generating potential after a firm gains competitive advantage and accrues above-normal profits. The attributes that protect resources of imitation and substitution by competitors are known as isolating mechanisms. This is a more guarded version of Barney's (1991) condition of inimitability and non-substitutability (Foss, 1997).

Collis and Montgomery (1995) noted that the characteristics of resources that create value and generate competitive advantage for a firm should have these attributes: inimitability, durability, appropriability, substitutability, and competitive superiority. (1) Inimitability refers to how difficult it is for rivals to secure or imitate a certain resource. If a rival can copy a resource, then the profits generated by the resource will be short-lived. (2) Durability refers to the speed at which a resource depreciates. The longer the life span of a resource, the more valuable it becomes and the more it will contribute towards securing and sustaining competitive advantage over time. (3) Appropriability refers to who captures the profits generated by a resource. The more static competitively valuable resources are, the more the firm is able to capture profit from them. (4) Substitutability refers to the availability of alternative resources that can erode the value of the firm's current competitive resources. Current resource value deteriorates when rivals develop a substitute resource that creates either a lower cost base or a more differentiated value proposition. (5) Competitive superiority refers to the activities that the firm can perform relatively better than competitors and industry benchmarks.

Fahy and Smithee (1999) concluded that these various conditions and characteristics of strategic resources can be considered under three aspects: value, barriers to duplication, and appropriability.

(1) Value: Not all resources are valuable; meaning, a resource is valuable if it exploits opportunities and/or neutralises threats in the firm's environment and enables the firm to conceive of, or implement, strategies that improve its efficiency and effectiveness (Barney, 1991; Peteraf, 1993).

(2) Barriers to duplication: Collis and Montgomery (1995) classified the sources of inimitability into four sources: physical uniqueness, path dependency, causal ambiguity, and economic deterrence.

1) Physical uniqueness can be easily explained in terms of location and legal system. For example, resources are protected by intellectual property laws such as licenses, patents, trademarks, and copyrights (Barney, 1991; Collis and Montgomery, 1995).

2) Path dependency refers to the resources that are unique and scarce because they are only developed and accumulated over long periods of time, such as reputation and relationships with suppliers (Dierickx and Cool, 1989; Peteraf, 1993).

3) Causal ambiguity signifies the ambiguity concerning the connection between actions and results. It is the difficulty to define what really a strategic resource is or how to recreate it (Dierickx and Cool, 1989; Reed and DeFillippi, 1990; Peteraf, 1993). Reed and DeFillippi (1990) suggested three sources of causal ambiguity: tacitness, complexity, and specificity. First, tacitness is a characteristic of skill-based activities and refers to an inability to identify a pattern of activities. Second, complexity is the result of social relationships within the organisation and from co-specialised assets. Finally, specificity is the idea that each firm has idiosyncratic properties which are specialised to a particular firm.

4) Economic deterrence occurs when a firm has invested in large scale assets. Thus, competitors can duplicate the resources, but they cannot invest in the same size assets because limited market potential will lead to inadequate return on investment (Collis and Montgomery, 1995).

(3) Appropriability: A resource will only be the key resource if its value can be captured within the firm rather than by potential claimants such as employees, clients, or suppliers (Fahy and Smithee, 1999; Clulow et al., 2003). According to Collis and

Montgomery (1998), it is a mistake to think that the value created by strategic resources will flow automatically to the firm's legal owners. Rather, the firm must consider who has the rights to strategic resources and other factors that affect the bargaining power of the relevant stakeholders, such as customers, distributors, suppliers, and employees. In this view, the firm has to appropriate value from strategic resources developed by itself, rather than from others (Collis and Montgomery, 1998; Fahy and Smithee, 1999).

It can be seen that not all resources are sources of sustainable competitive advantage. Some resources are more advantage generating than others. Firms should focus on the identification and nurturing of those resources that allow for the development of competitive advantage (Collis and Montgomery, 1995; Fahy and Smithee, 1999; Srivastava et al., 2001; Augier and Teece, 2009). Differences in firm success are assumed to be based on the variation in exploiting resources. According to the above criteria, intangible resources, comprising intangible assets and capabilities, have greater value than tangible resources in creating competitive advantage. Unlike tangible resources, intangible resources are argued to be hard to purchase in the markets, hard to transfer between firms, and hard to imitate (Barney, 1991; Grant, 1991; Fahy and Smithee, 1999). Thus, intangible resources play an important role in the firm's value creation (Srivastava et al., 2001; Carmeli and Tishler, 2004). The valuation of intangible resources seems to be more difficult in terms of accounting and applying into economics formulae in comparison to tangible resources (Srivastava et al., 2001; Carmeli, 2004; Carmeli and Tishler, 2004). Firms nowadays are not considered solely as a combination of tangible resources, organised for a productive process to achieve some objectives. Rather, the intangible resources are the strategic

component necessary for firms to compete and to obtain advantages in the markets (Vargo and Lusch, 2004). In this regard, the importance of intangible resources in the RBV literature has been documented. For example, the findings from Galbreath (2005) confirmed that in general intangible resources contribute more significantly to firm success than tangible resources. Carmeli and Tishler (2004) also found a significant positive relationship between intangible organisational elements and firm performance.

2.2.4. Competitive Advantage: The Missing Link in the RBV Framework

Although the possession of heterogeneous resources can allow firms to achieve and sustain competitive advantage, the empirical works in the RBV research do not reflect this notion. Some observers have noted this apparent flaw. For example, Newbert (2007, p. 141) noted that "the majority of tests employing the resource heterogeneity approach examine the relationship between a specific resource, capability, or core competency and performance, not competitive advantage". Powell (2001) and Ketchen et al. (2007) also argued that these tests are theoretically flawed. Competitive advantage is a difficult concept to operationalise and measure, but it is needed in order to completely test the resource-based view logic (Powell, 2001; Ketchen et al., 2007; Murray et al., 2011).

Competitive advantage refers to superiority over rivals in a particular market, and it is a kind of unique position vis-à-vis competitors (Day and Wensley, 1988; Hunt and Morgan, 1995, 1997; Peteraf and Barney, 2003; Ketchen et al., 2007). Traditional

types of competitive advantage are low cost and differential advantage (Porter, 1980, 1985, 1989). In the present study, competitive advantage is approached from the standpoint of resource-based logic. Day and Wensley (1988) and Day (1990) defined competitive advantage as a positional and performance superiority that results from the firm's relative superiority in resources. To obtain a full picture of competitive advantage, Day and Wensley (1998) argued that it should be divided into its competitive parts: sources of advantage, position of advantage, and performance outcomes (the SPP framework). Hunt and Morgan (1995, 1997) also noted that competitive advantage results from a comparative advantage in resources. The market position for the firm is determined by the combination of the firm's relative resource-produced value for certain segments and relative resource costs for producing such value.

Piercy et al. (1998) applied the SPP framework of Day and Wensley (1988) and proposed the concept of export competitive advantage, which helps enhance the understanding of the manner in which export marketing resources contribute to the firm's competitive advantage in overseas markets. According to their perspective, export competitive advantage consists of cost, product, and service advantage. Cost advantage involves the resources consumed in producing and marketing firm value offered and affects price and perceived value in the export markets. Product advantage denotes quality, design, and other product attributes that differentiate the firm value offered from those of competitors. Service advantage includes service related components of the value offered, such as delivery speed and reliability and after-sales service quality. Superior export performance is driven by the existence of these competitive advantage (Piercy et al., 1998; Morgan et al., 2004; Navarro et al.,

2010). This logic is similar to Collis and Montgomery's (1995), Peteraf and Barney's (2003), and Barney and Clark's (2007) notion of the resource-based view of competitive advantage.

According to Collis and Montgomery (1995), competitive advantage exists when the firm possesses and provides products and services that are superior to those offered by competitors in the target markets. They asserted that resources need to pass external market tests to qualify as valuable sources of superior performance. This test of competitive superiority of the resources assesses the ability of the resource to contribute to the production of products or services that customers want, at a price they are willing to pay. This shows that the value of a resource or a bundle of resources must be determined through its ability to generate value in the market. The RBV integrates both internal and external properties in its framework and thus includes the value through environmental environments.

Similarly, Peteraf and Barney (2003) stated that the firm that has attained competitive advantage has created more economic value than competitors by producing products and services with greater benefits at the same cost compared to competitors and/or the same benefits at lower cost compared to competitors. Competitive advantage is therefore expressed in terms of the ability to create a relatively higher economic value from the firm's critical resources. According to Barney and Clark (2007), a firm achieves competitive advantage when its actions in a particular market create economic value, which is associated with the firm's ability to earn a persistently higher rate of profit or have the potential to earn higher rate of profit. Hence, the firm

becomes profitable or earns rent because its costs are significantly lower and/or its products and services are of significantly higher quality.

Piercy et al. (1998) has established the concept of export competitive advantage, and other researchers in the field of international/export marketing have strongly relied on their pioneering concept of cost, product, and service advantage (e.g., Morgan et al., 2004; Kaleka, 2002, 2011; Leonidas et al., 2011). Due to the pressure of global competition, the need to deliver products and services at lower cost is paramount (Morgan et al., 2004; Kim and Mauborgne, 2005).

2.3. Export Marketing Resources

Globalisation and rapid growth of international trade have made exporting an important activity for many firms to seek expansion opportunities (Katsikeas, 1994; Thirkell and Dau, 1998; Paliwoda, 1999; Crick et al., 2002; Skarmeas et al., 2008; Sousa et al., 2008). To survive and grow in competitive export market environments, firms' resources are critical factors (Piercy et al., 1998; Zou et al., 2003; Morgan et al., 2004; Balabanis et al., 2004; Leonidas et al., 2011). More specifically, the importance of marketing resources have recently been documented in the literature, and this viewpoint can offer richer and greater insights into firms' export performance (e.g., Piercy et al., 1998; Morgan et al., 2004; Murray et al., 2011). Marketing researchers should therefore pay particular attention to delineating and assessing export marketing resources in order to build on the RBV approach to explaining export performance (Morgan et al., 2004).

To develop an integrated framework of export marketing resources and their performance implications, this section begins with a review of the literature on marketing resources. Next, the theoretical background and conceptual issues regarding export marketing resources are discussed. Theoretical developments in strategic management, marketing, international business and other business disciplines should provide marketing researchers with a strong theoretical foundation to build a respectable body of knowledge in export marketing (Balabanis et al., 2004).

2.3.1. The Overview of Marketing Resources

The RBV has become a major focus among marketing researchers in understanding the sources of competitive advantage and superior performance (e.g., Day, 1994; Srivastava et al., 1998; Hooley et al., 1998; Hooley et al., 2001; Srivastava et al., 2001; Krasnikov and Jayachndran, 2008). Scholars have proposed several configurations and classifications of marketing resources: market-based capabilities, market-based assets, and marketing assets and capabilities.

(1) Market-Based Capabilities (Day, 1994):

Day (1994) defined market-based capabilities as integrative processes whereby the collective knowledge, skills, and resources of the firm are applied to the market-related needs of the business, thus enabling the firm to add value to its goods and services, adapt to market conditions, take advantage of market opportunities, and overcome competitive threats. According to Day (1994), capabilities are closely interlinked with organisational processes in the value chain, and they can be sorted into three categories depending on the orientation and focus of the defining processes.

One end of the spectrum represents the outside-in capabilities, whose focal point is outside the organisation. The purpose of these outside-in capabilities is to connect the processes that define the other organisational resources to the external environment and enable the business to compete by anticipating market requirements ahead of competitors and creating durable relationships with customers, channel members, and suppliers. At the other end of the spectrum are those that are deployed from the inside-out capabilities that focus on firm's internal capabilities. Examples are financial, manufacturing and other transformation activities, logistics, and human resource management. Finally, spanning capabilities are needed to integrate the inside-out and outside-in capabilities. Strategy development, new product/service development, price setting, purchasing, and customer order fulfilment are critical activities that must be informed by both external (outside-in) and internal (inside-out) analyses. Day (1994) has well-established a market-based capabilities approach, and other researchers in the field of marketing have strongly built upon the concept of marketing resources on his pioneering works (e.g., Hooley et al., 1998; Srivastava et al., 1998; Hooley et al., 2001; Srivastava et al., 2001; Morgan et al., 2004).

(2) Market-Based Assets (Srivastava et al., 1998; Srivastava et al., 2001):

Srivastava et al. (1998) introduced a concept of market-based assets. Their main thesis is the task of developing and managing market-based assets with the objective of increasing shareholder value by accelerating and enhancing cash flows, lowering the volatility and vulnerability of cash flows, and increasing the residual value of them. For example, market-based assets enhance cash flow of the firm by three possible mechanisms: (1) increasing cash flows, either through top-line sales growth or increasing margins as a result of driving out costs, for example, through a

collaborative relationship, which can create the possibility for vendor-managed inventory and an increase in operating margins, (2) earlier cash flows, such as the more rapid introduction of new products through collaborative relationship with suppliers, and (3) less volatile cash flow, for instance, through long-term stable relationships with distributors.

Srivastava et al. (1998) distinguished two related types of market-based assets: (1) relational market-based assets, and (2) intellectual market-based assets. Relational market-based assets refer to outcomes of the relationship between a firm and key external stakeholders including distributors, retailers, customers, and other strategic partners. Intellectual market-based assets are defined as the types of knowledge the firm possesses about its environment such as the emerging and potential state of market conditions and the entities in it, including competitors, customers, channels, suppliers, and social and political interest groups.

Srivastava et al. (2001) further developed the market-based assets framework that facilitates integration of constructs central to the RBV and marketing, and illustrated how the RBV and marketing can refine and extend each other's traditional frames of analysis. They pointed out a number of issues that relate to how resources are used to create competitive superiority and manage market dynamics and uncertainty. They stated that the ability to generate and sustain customer value and competitive advantage and in turn leverage firm performance is through the recognition of channels, distributors, customers, strategic partners, and other key stakeholders as relational market-based assets. On the other hand, market knowledge, customer-driven culture, and market orientation should be perceived as intellectual market-

based assets. The framework for analysis of market-based resources is presented in Figure 2.7.

Figure 2.7: Framework for Analysis of Market-Based Resources

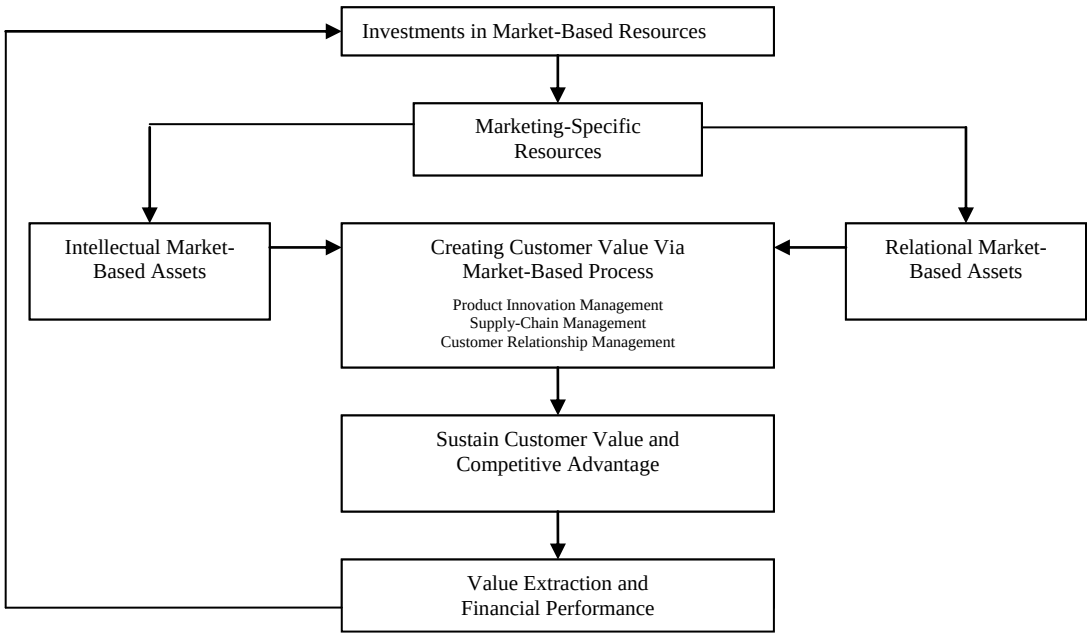

Source: Srivastava et al. (2001, p. 782)

In their view, relational and intellectual market-based assets combine to form the foundation for market-based processes and capabilities (bundles of interrelated work routines and tasks) in which assets are converted into products or solutions that customers desire, thereby generating economic value for the firm. In return, the value extraction and financial performance will nurture and sustain market-based assets.

Srivastava et al. (2001) also further elaborated the concept of relational and intellectual market-based assets. They argued that relational market-based assets are intangible and associated with external organisations because these relationships are based on factors like trust and reputation. A firm can potentially develop these

relations to a point at which they become relatively rare and difficult for competitors to replicate. On the other hand, intellectual market-based assets refer to the internal knowledge of the organisation that is intangible and embedded in individuals and processes. These market-based assets would include various classes and types of knowledge of the external and internal environments, know-how that is embedded into individuals' or units' skills, and know-how to leverage intraorganisational relationships. These market-based assets are organisational attributes that a firm should acquire, develop, nurture, and leverage for sustained competitive advantage and superior return.

Srivastava et al. (1998) and Srivastava et al. (2001) emphasised the crucial role of intangible assets and stated that the shift from tangible assets to relational and intellectual assets as intangible market-based assets represents the core new competitive advantage creation. However, it is illogical to dismiss tangible assets as unimportant factors in building competitive advantage. Tangible assets as complementary resources are also needed to contribute to the firm's competitive advantage (Fahy and Smithee, 1999; Fahy, 2002; Foss and Knudsen, 2003; Barney and Clark, 2007). Furthermore, relational and intellectual market-based assets also play important roles to invigorate and unleash the customer value-generating potential embedded in tangible assets in building export market-based capabilities, which are the integrative processes enabling firms to add value in their offerings to the markets (Srivastava et al., 1998; Srivastava et al., 2001). Thus, both tangible market-based assets and intangible (relational and intellectual) market-based assets are important for the firms' competitive advantage creation process.

(3) Marketing Assets and Capabilities (Hooley et al., 1998; Hooley et al., 2001):

Hooley et al. (1998) and Hooley et al. (2001) proposed the concept of marketing assets and capabilities. Hooley et al. (1998) classified marketing capabilities into: (1) strategic, (2) functional, and (3) operational. Strategic capabilities refer to variables related to the management's ability to identify and interpret the environmental trends and industry events affecting the firm. Functional capabilities are related to functions or processes within the firm. Hooley et al. (1998) argued that Day's (1994) classification of inside-out, outside-in, and spanning capabilities fit their concept of functional capabilities adequately. Operational capabilities relate to the skills that enable individual managers and employees to function in order to serve the market. Later, Hooley et al. (2001) presented the concept of market-focus resources. They defined market-focused resources as those resources that can create value in the market. The market-focused resources are culture, marketing assets, and marketing capabilities. Culture implies market orientation while marketing assets include aspect like supply chain, alliances, and customer relationships. Marketing capabilities are essentially similar to market-based capabilities identified by Day (1994).

In general, there are many attempts by leading marketing theorists to provide a broad-based integration of the RBV and marketing. The literature suggests that marketing resources consist of market-based assets and capabilities. Market-based assets can be defined as the resource endowments that the firm has acquired or built over time and that can be deployed to advantage in the markets (Day, 1994; Srivastava et al. 1998; Srivastava et al., 2001; Hooley et al., 2001). Market-based capabilities are not resources in and of themselves, but are the integrative processes by which resources are applied to add value (Day, 1994; Hooley et al., 2001). In other words, market-

based capabilities are the integrative processes by which available assets are developed, combined, and transformed into value offerings for the market (Day, 1994; Hooley et al., 1998; Hooley et al., 2001). Marketing resources, including market-based assets and capabilities, contribute to idiosyncratic management and firm heterogeneity to create a sustained competitive advantage and superior performance.

2.3.2. The Concept of Export Marketing Resources

The RBV has become a theoretical challenge for export marketing researchers (Balabanis et al., 2004; Morgan et al., 2004). The early frameworks for assessing export marketing resources, competitive advantage and export performance have been proposed by Piercy et al. (1998), Zou et al. (2003), and Morgan et al. (2004). Piercy et al. (1998) highlighted the important role of resources and competitive skills in exporting. While resources primarily refer to physical assets, the scale of operation, financial assets, and experience in export markets, competitive skills in exporting include informational, customer relationship, product development, and supply chain skills (Piercy et al., 1998). Morgan et al. (2004) utilised the same market-based resources framework as Piercy et al. (1998), but highlighted different marketing capabilities, which include informational, relationship building, and product development capabilities. Zou et al. (2003) focused solely on export marketing capabilities, including product development capability, distribution capability, communication capability, and pricing capability in their framework.

These studies raise an important research issue regarding whether different types of firm resources can give rise to export competitive advantage and export performance.

In advancing export marketing theory, different dimensions and configurations of export marketing resources should be further investigated (Morgan et al., 2004). As a result, Srivastava et al.'s (2001) relational and intellectual market-based assets framework is a promising concept to establish a better understanding of export marketing resources and performance implications. The focus on relational and intellectual market-based assets as strategically intangible assets should offer a new explanation as to why some export firms are more successful than others.

2.3.2.1. Export Market-Based Assets

To achieve superior competitive advantage and export performance, the importance of valuable marketing assets and their deployment have been noted. Based on the literature, export market-based assets can be defined as the resource endowments that the firm has acquired or built over time and that can be deployed to advantage in the export markets (Day, 1994; Srivastava et al. 1998; Srivastava et al., 2001; Hooley et al., 2001; Zou et al., 2003). Export market-based assets consist of not only tangible export market-based assets but also intangible (relational and intellectual) export market-based assets. Relational and intellectual market-based assets, as strategically intangible assets, represent the core new competitive advantage creation, which help to accelerate the growth of the firm (Srivastava et al., 1998; Srivastava et al., 2001).

2.3.2.1.1. Tangible Export Market-Based Assets

Generally, tangible assets include factors containing financial and physical values, which can be observed in nature, have physical properties, are owned and controlled by the firm, and contain an accounting value as recorded on the firm's financial statements (Srivastava et al., 1998; Fahy and Smithee, 1999). Tangible assets are, in general, those resources for which there are well-defined markets and thereby can be priced according to their value (Andersen and Kheam, 1998; Chrisman et al., 1998). Chatterjee and Wernerfelt (1991) clarified tangible assets as physical and financial assets. Grant (1997) further operationalised physical assets as cash-in value of fixed assets, workshop scale, life-span of equipments, and the flexibility of workshop and machines. In his view, financial assets could be indicated by gearing and leveraging, the ratio of net cash flow to capital expenditure, the bank loan interest, and so forth.

Tangible assets are the firm's basic factor stocks (Amit and Schoemaker, 1993; Becerra, 2009). According to Srivastava et al. (1998), tangible assets can be leveraged by firms to (1) lower costs by enhancing productivity, (2) enhance revenues through higher price; for example, superior equipment leads to superior product functionality, features, and durability, (3) serve as a barrier to entry or mobility barrier because others must make similar investments, (4) provide a competitive edge to the extent that they make other assets more valuable, and (5) provide managers with options, for example, if the plant or equipment can be shared across products.

Although intangible resources are more favourable than tangible resources in contributing to firm success, it is illogical to dismiss tangible resources as

unimportant factors in building competitive advantage (Fahy and Smithee, 1999; Makhija, 2003). Foss (1997) and Andersen & Kheam (1998) suggested that future empirical research should take into account the tangible assets that are conventionally perceived to be less important for firm growth/performance in the RBV literature. In reality, there are many examples of firms having attained and sustained competitive advantage by means of tangible assets (Foss, 1997; Fahy, 2002; Becerra, 2008). Chrisman et al. (1998) noted that the survival of a firm will, in general, depend on its ability to secure tangible assets with which to do business. Few firms can survive for long without these resources. In an export context, Piercy et al. (1998) and Morgan et al. (2004) reported that making tangible export market-based assets including physical assets, scale of operation, and financial assets available for the firm are highly correlated with its competitiveness.

2.3.2.1.2. Relational Export Market-Based Assets

Based on the literature, relational export market-based assets can be defined as the bonds between the export firm and external stakeholders. They stem from the relationships that the firm has with external stakeholders including suppliers, distributors, retailers, customers, and other strategic partners, and they are often based on factors such as trust and commitment (Srivastava et al., 2001; Olkkonen et al., 2007; Styles, 2008). This implies an opportunity for the firm to develop intimate relationships that may be both relatively rare and difficult to imitate, thereby exhibiting the qualities necessary for the creation of sustainable competitive advantage (Srivastava et al., 2001; Ling-Yee, 2007). Gulati et al. (2000) supported this view and highlighted the importance of resources shared among industry

incumbents through business relationships. Teece et al. (1997) also noted that business relationships are part of the firm's asset position that shapes the organisational processes contributing to their competitive advantage. The crucial role of the inter-firm ties is to gain access to resources such as information, capital, goods, and services, to improve the firm's strategic position, and to reach new markets. In addition, these relationships enable the firm to learn new skills, gain legitimacy, control transaction costs, reduce contract cost, and thus add value to business activities and processes (Johnson and Raven, 1996; Gulati et al., 2000; Srivastava et al., 2001; Fang et al., 2008; Matanda and Freeman, 2009). Thus, it could be concluded that the benefit of relational market-based assets is to gain synergy between firms. As noted by Ansoff (1965), synergy is the effect that can produce a combined return on the firm's resources greater than the sum of its parts (in merger arithmetic: 1+1>2). These provide the firm with the potential to maintain and enhance competitive advantage and superior returns (Gulati et al., 2000; Matanda and Freeman, 2009).

Strategic relationships, such as supply chain and strategic alliances, therefore, are the underlying concepts of relational market-based assets (Srivastava et al., 1998; Ling-Yee and Ogunmokun, 2001; Srivastava et al., 2001; Greenly et al., 2005). These relationships are assets that must be cultivated and leveraged and conceptualised as relational market-based assets that arise from the commingling of the firm with entities in its external environment (Srivastava et al. 1998; Srivastava et al., 2001). The utilisation of these relational assets has emerged as a priority for many firms today (Hitt et al., 2000; Srivastava et al., 2001; Greenley et al., 2005).

Supply chain assets are the extent of the distribution network, and relationships with channel intermediaries and suppliers (Greenley et al., 2005). They are networks that include vendors of raw materials, plants that transform those materials into useful products, and distribution centres to get the products to customers (Zailani and Rajagopal, 2005). In other words, supply chain assets are a network of organisations that are involved, through upstream and downstream linkages, in different processes and activities that produce value in the form of products and services for ultimate consumers (Cox, 1997; Srivastava et al., 2001). Supply partnerships seek to achieve the efficiencies of vertically integrated systems and share potential benefits as market conditions change (Evans and Berman, 2001; Cox et al., 2002; Ketchen and Giunipero, 2004).

The whole supply channel includes the participants, manufacturers, and distributors linked together, so they can fulfil the multi-functional role which provides low-cost, high-quality, and rapid delivery to the market (Lummus and Vokurka, 1999). Moreover, supply chain network can create competitive advantage through mechanisms such as increased market access, better material sources, and cost-effective transportation (Cox et al., 2002; Simatupang and Sridharan, 2002; Slack et al., 2007). Therefore, the value to be gained from collaboration is manifested as enhanced business performance (Simatupang and Sridharan, 2002; Matanda and Freeman, 2009). Some supply chain networks can be defined as constellations of businesses organised through the establishment of social rather than legally binding contracts (Barringer and Harrison, 2000; Gibbs and Humphries, 2009). Each supply chain participant tries to appropriate as much as possible, and appropriating a certain share of the chain value is done on the basis of owning or controlling resources that

are unique and vital to the supply chain partners. These critical supply chain assets are the foundation of supply chain power (Cox, 1997). In today's business world, when firms operate interdependently with their supply chain partners, initiatives of one focal firm can have multiplied positive effects on the processes beyond its own boundaries (Cox, 1997; Cox et al., 2002). As a result of dealing closely with supply chain partners over time, firms reduce environmental uncertainty. They manage their dependence on each other and gain cost efficiency and achieve satisfaction and reputation from working within a peer group (Gibbs and Humphries, 2009). A good supply chain network is thus an important factor contributing to success in overseas markets (Matear et al., 2000; Leonidou et al., 2002; Zhang et al., 2003; Styles et al., 2008; Matanda and Freeman, 2009).

Strategic alliance assets also capture the notion of relational market-based assets (Srivastava et al., 1998; Srivastava et al., 2001). Greenly et al. (2005) defined strategic alliance assets as access to market, shared technology, managerial expertise, and financial resources through strategic partners. They are an agreement for cooperation among two or more firms to improve their competitiveness and performance through the utilisation of shared resources (Cravens et al., 1993; Ireland et al., 2002; Srivastava et al., 2001). Strategic alliances enable firms to collaboratively exploit the resources they bring together as a team. As a result, they increasingly focus on complex systems and solutions that require multiple skill sets and innovations (Gibbs and Humphries, 2009). Strategic alliances are formed when firms partially combine their skills and resources to achieve goals that each firm cannot attain independently (Mohr and Spekman, 1994; Doz and Hamel, 1998; Das and Teng, 2000). A strategic alliance is sometimes referred to as partnership that offers

businesses a chance to join forces for a mutually beneficial opportunity and sustained competitive advantage (Greenley et al., 2005). The Boston Consulting Group described four types of strategic alliance: (1) expertise alliances – where firms share expertise such as outsourcing agreements for information technology, (2) new business alliances – partnerships where non-competing firms look to exploit a new business or market, (3) cooperative alliances – such as purchasing groups and trade and industry associations (4) M&A-like alliance – where the alliance is a substitute for merger and acquisition that is inhibited by legal or commercial factors (Cools and Roos, 2005). Furthermore, international strategic alliances, which combine strengths of the partners, permit each to perform better in international markets as the partners may contribute marketing knowledge and skills, production technology, manufacturing competency, and access to financial resources and distribution channels (Johansson, 1995; Hitt et al., 2000; Zhang et al., 2003). The internal motivations for strategic alliances lie in the heightened realisation among growth-seeking companies that they could perform much better in the global competitive landscape by learning and acquiring benefits from one another such as through sharing resources and collaborating to pursue new market opportunities (Hitt et al., 2000; Johanson and Vahlne, 2006).

The appropriate use of relational market-based assets enables the firm to respond more quickly to market needs by taking advantage of existing networks (Srivastava et al., 1998; Harvey et al., 2001). The firm can develop export relationships in other countries' networks: 1) through the establishment of relationships in country networks that are new to the firm, i.e., international expansion, 2) through further development of these relationships, i.e., penetration, and 3) through the establishment of

relationships in different countries' networks, i.e., international integration (Johanson and Vahlne, 1990; Johanson and Mattsson, 1995; Srivastava et al., 1998). Therefore, competing on an international level is made possible through these market-based assets.

2.3.2.1.3. Intellectual Export Market-Based Assets

Based on the literature, intellectual export market-based assets can be defined as the knowledge about internal and external market environments which reside within the export firm. Intellectual market-based assets include many classes and types of knowledge regarding both external and internal environments, know-how embedded in individuals or units' skills, and know-how to leverage intraorganisational relationships (Srivastava et al., 2001). They also include detailed knowledge that the firm and its employees possess, which can be used to denote all aspects of personal tacit and explicit marketing knowledge (Srivastava et al., 2001).

Srivastava et al. (2001) argued that the ability to generate and sustain customer value and competitive advantage and in turn leverage firm performance is through the recognition of market orientation or market knowledge as intellectual market-based assets. More recently, Morgan et al. (2009) also viewed market orientation as market-based knowledge assets. A firm facing market heterogeneity regarding demand and supply stands to benefit greatly from adopting market orientation, which advocates systematic acquisition, dissemination, and use of intelligence information to develop and market the appropriate goods and services that are valued by customers in the markets (Cadogan and Diamantopoulos, 1995; Srivastava et al., 2001; Lings, 2004;

Morgan et al., 2009). This intelligence can be embedded in individuals and processes of the firm, and it is crucial for the development of customer knowledge (Srivastava et al., 2001; Lings, 2004; Lings and Greenley, 2005; Zerbini et al., 2007). External and internal market orientation therefore captures the notion of intellectual market-based assets. Moreover, it is further elaborated in order to understand how market orientation reflects the knowledge about internal and external market environments, which reside within the export firm.

Market Orientation

The marketing concept is the bedrock on which the modern study of marketing is based, and market orientation is a central component of the marketing concept (Deshpande and Farley, 1998; Atuahene-Gima et al., 2005). However, the concept of market orientation differs from the marketing concept. While the marketing concept has a single external focus on customers, the concept of market orientation emphasises customers and competitors as well as organisational systems and processes (Narver and Slater, 1990; Kohli and Jaworski, 1990; Hunt and Morgan, 1995; Hunt and Lambe, 2000). Market orientation represents a set of behaviours or activities that reflect upon an organisation's degree of adoption of the marketing concept philosophy (Atuahene-Gima, 1996; Mason and Harris, 2006).

There is a great deal of significant effort heavily focused on the conceptualisation of the market orientation construct. However, there is no common precise understanding of the term 'market orientation' among marketing scholars. The marketing literature reflects remarkable inconsistencies in defining the concept of market orientation. A large variety of elements are adopted in market orientation studies, which can be

categorised into several perspectives. As per guideline suggested by Lafferty and Hult (2001), these perspectives encompass the decision-making perspective, the culturally-based behavioural perspective, the market intelligence perspective, the strategic marketing perspective, the customer orientation perspective, and the system-based perspective.

(1) The Decision-Making Perspective (Shapiro, 1988):

Shapiro (1988) conceptualised market orientation as an organisational decision making process. The principle of this perspective is the management's commitment to share information among appropriate functions, make strategic and tactical decisions interfunctionally and interdivisionally, and execute those decisions with a sense of commitment.

(2) The Culturally-Based Behavioural Perspective (e.g., Narver and Slater, 1990; Deng and Dart, 1994; Greenley, 1995; Harris, 1996; Chang and Chen, 1998; Han et al., 1998; Lado et al., 1998; Hooley et al., 2000; Langerak, 2003; Im and Workman, 2004; Tajeddini et al., 2006):

Narver and Slater (1990) described market orientation as a form of organisational culture, and stated that market orientation consists of customer orientation, competitor orientation, and interfunctional coordination. A business is market-orientated when its culture motivates employees throughout the organisation to be systematically and entirely committed to the continuous creation and maintenance of superior customer value (Slater and Narver, 1994).

(3) The Market Intelligence Perspective. (e.g., Kohli and Jaworski, 1990; Cadogan and Diamantopoulos, 1995; Avlonitis and Gounaris, 1997; Vorhies et al., 1999; Matsuno and Mentzer, 2000; Rose and Shoham, 2002; Blesa and Bigne, 2005):

Kohli and Jaworski (1990) viewed a market-oriented organisation as one whose actions are based on the marketing concept, and stated that market orientation consists of market intelligence generation, market intelligence dissemination, and responsiveness. This perspective holds that there are three elements underlying the definition: learning about market developments (including customers, competitors, other relevant market participants, and exogenous factors), sharing information with appropriate personnel, and adapting reactive and proactive offering to a changing market (Jaworski and Kohli, 1993).

(4) The Strategic Marketing Perspective (Ruekert, 1992; Atuahene-Gima, 1995a):

Ruekert (1992) recognised market orientation as a successful business strategy and stated that the level of market orientation is the degree to which the business unit obtains and uses information from customers, develops a strategy which will meet customer needs, and implements that strategy by being responsive to customer needs and wants. Atuahene-Gima (1995a) also recognised market orientation as a successful business strategy. However, it is apparent that this perspective involves merely customers.

(5) The Customer Orientation Perspective (Deshpande et al., 1993):

Deshpande et al. (1993) proposed a conflicting view of market orientation and suggested that it is synonymous with customer orientation: the set of belief that puts

the customer's interest first. They argued that competitor orientation should not be incorporated into their definition.

(6) The System-Based Perspective (Becker and Homburg, 1999):

Becker and Homburg (1999) established an alternative perspective of market orientation by defining market orientation as the degree to which the different management systems of an organisation are designed in a market-oriented way. In this view, market orientation is composed of a market-oriented organisation system, a market-oriented information system, a market-oriented planning system, a market-oriented controlling system, and a market-oriented human resource management (HRM) system. Nonetheless, this perspective is not generally accepted as it remains understudied.

The decision-marketing perspective and strategic marketing perspective are closely related to the market intelligence perspective, whereas the customer orientation perspective is related to the culturally-based behavioural perspective (Lafferty and Hunt, 2001). Although there are distinctions among these perspectives, there are some similarities reflecting common characteristics along these lines. First, customer is central to market orientation. Second, market orientation incorporates competitors or the forces shaping customer needs. Third, information about customers, competitors, and other market participants is important for a market-oriented firm. Finally, the whole firm should respond to identified customer needs based on shared information. In short, market orientation leads to actions by the whole firm toward the markets, where such actions are guided by market information.

A majority of market orientation constructs are fundamentally based on either the culturally-based behavioural perspective or the market intelligence perspective (Lafferty and Hult, 2001; Raaij and Stoelhorst, 2008). The former adopts the model of Narver and Slater (1990), whereas the latter adopts that of Kohli and Jaworski (1990). Narver and Slater (1990) described market orientation as a form of organisational culture, and stated that market orientation consists of customer orientation, competitor orientation, and interfunctional coordination. A business is market-orientated when its culture motivates employees throughout the firm to be systematically and entirely committed to the continuous creation and maintenance of superior customer value (Slater and Narver, 1994). On the other hand, Kohli and Jaworski (1990) viewed a market-oriented organisation as one whose actions are based on the marketing concept and stated that market orientation consists of market intelligence generation, market intelligence dissemination, and responsiveness. This perspective holds that there are three elements underlying the definition: learning about market developments (including customers, competitors, other relevant market participants, and exogenous factors), sharing information with appropriate personnel, and adapting reactive and proactive offering to a changing market (Jaworski and Kohli, 1993). Market orientation therefore represents a set of cross-functional processes and activities directed at creating and satisfying customers through continuously assessing market information.

Cadogan and Diamantopoulos (1995) worked on the integration of Narver and Slater's (1990) and Kohli and Jaworski's (1990) market orientation, and expanded the market orientation construct, introducing an international dimension. They compared the conceptual and operational dimensions of both constructs in the form of a 3x3

tableau and commented that they are complementary and mutually exclusive (See Table 2.2). In addition, Masion and Harris (2006) pointed out the similarities between both constructs. For example, both focus on the central role of the customer in the manifestation of market orientation; both entail an external orientation (focus outside organisational boundaries); both recognise the importance of being responsive to customers at an organisational level. To some extent, the market orientation's components developed by Kohli and Jaworski (1990) and Narver and Slater (1990) tap the same construct.

Table 2.2: Conceptual and Operational Overlaps in Two Dominant Market Orientation Constructs: Narver and Slater VS. Kohli and Jaworski

	Kohli and Jaworski (KJ)		
Narver and Slater (NS)	Intelligence Generation	Intelligence Dissemination	Responsiveness
Customer Orientation	Conceptual Overlap: yes Operational Overlap: yes Operational Examples NS: measure customer satisfaction KJ: we meet our customers frequently to find out their preferences	Conceptual Overlap: yes Operational Overlap: ambiguous Operational Examples NS: understand customer needs KJ: periodically circulates documents of customers information	Conceptual Overlap: no Operational Overlap: yes Operational Examples NS: strategies driven by customer values KJ: tend to ignore customer complaints
Competitor Orientation	Conceptual Overlap: yes Operational Overlap: ambiguous Operational Examples NS: top managers discuss competitor's strategies KJ: competitor intelligence generated by several departments	Conceptual Overlap: yes Operational Overlap: yes Operational Examples NS: sales people share competitor information KJ: a lot of informal hall talk concerns our competitors' tactics and strategies	Conceptual Overlap: no Operational Overlap: yes Operational Examples NS: respond rapidly to competitors' action KJ: implement responses to competitors' action immediately
Interfunctional Coordination	Conceptual Overlap: yes Operational Overlap: yes Operational Examples NS: engage interfunctional customer calls KJ: members of manufacturing departments interacts with customers	Conceptual Overlap: yes Operational Overlap: yes Operational Examples NS: customer information share among function KJ: marketing staff spend time discussing customers' future needs with other function	Conceptual Overlap: yes Operational Overlap: yes Operational Examples NS: all functions contribute to customer value KJ: activities of different departments are well coordinated

Source: Cadogan and Diamantopoulos (1995, p. 44)

Cadogan and Diamantopoulos (1995) focused on exploring the nature of market orientation in an export context and proposed a modified conceptualisation of market orientation, where Narver and Slater's (1990) customer and competitor orientation

identifies the specific focus of Kohli and Jaworski's (1990) market-oriented behaviours (market intelligence generation, dissemination, and responsiveness). They also identified an additional component of market orientation, known as a coordinating mechanism. A coordinating mechanism provides a means through which the firm can maximise the effectiveness of the behaviours or activities associated with generating, disseminating, and responding to export market intelligence. Later, Diamantopoulos and Cadogan (1996) applied the reconceptualisation of market orientation to a qualitative study, using an in-depth interview approach. Their study offered insights into how market orientation is manifested in an export setting and investigated possible factors influencing the firm's ability to implement market orientation in its export operations. Finally, Cadogan et al. (1999) published the development and validation of a novel measure of export market orientation. This measure represents an important step in developing an understanding of the causes and effects of export market orientation. However, the recent development of the export market orientation construct is restricted to three market-oriented behaviours: export market intelligence generation, export market intelligence dissemination, and export market responsiveness (e.g., Cadogan et al., 2001; Cadogan et al., 2002; Cadogan et al., 2003; Cadogan and Cui, 2004; Cadogan et al., 2006; Murray et al., 2007; Murray et al., 2011).

The focus of the firm's export market orientation is towards the firm's export markets. Export market orientation involves the continuous monitoring of the firm's customers, competitors, and market environments to develop and market the appropriate goods and services that are valued by its customers in export markets (Cadogan and Diamantopoulos, 1995; Murray et al., 2007). Export market orientation consists of (1)

export market intelligence generation, (2) export market intelligence dissemination, and (3) export market responsiveness (Cadogan et al., 2002; Cadogan and Cui, 2004; Cadogan et al., 2006; Murray et al., 2007; Murray et al., 2011). First, export market intelligence generation concerns all behaviours or activities associated with generating information about export customers' current and future needs and wants, competition in the firm's export markets, and other exogenous factors such as regulations, technological developments, politics, and economics. Second, export market intelligence dissemination concerns the distribution of this information to the appropriate export decision makers. Export market intelligence dissemination should be distributed throughout the firm as a whole (i.e., between export staff, between export staff and other departments or functions). Finally, export market responsiveness is the design and implementation of strategies and tactics in response to information gathered about export markets. These responses must be directed towards export customers, export competitors, or the environmental changes affecting the firm, its customers and its competitors (Cadogan et al., 2002; Cadogan and Cui, 2004; Cadogan et al., 2006). As a result, firms are well positioned to develop products and ancillary services that cost effectively satisfy export customer needs and preferences, thereby achieving superior performance (Cadogan and Diamantopoulos, 1995; Langerak, 2003; Murray et al., 2007).

Balancing External and Internal Market Orientation

While market orientation can be considered a cornerstone of marketing thought (Deshpande and Farley, 1998; Hunt and Lambe, 2000; Raaij and Stoelhorst, 2008), Lings (1999) suggested that the market orientation literature focuses mainly on external stakeholders, customers, and competitors, while paying little attention to

internal stakeholders such as employees. Several marketing scholars have also noted the need to focus on employees if a successful market orientation is to be developed (e.g., Day, 1994; Hunt and Morgan, 1995; Becker and Homburg, 1999; Harris, 2002; Gounaris, 2008). Nowadays, the number of touch-points between the producer and the customer has increased beyond the specific requirements needed to support the goods themselves, and customer interface has grown to support the customers' value creation process (Vargo and Lusch, 2004; Gronroos, 2006). Each employee is responsible for the creation of customer value either directly or through internal cross-functional relationships or co-operation. Hence, these employees possess valuable knowledge and experience pertaining to customers and processes that can be used to improve business processes, products, and services (Gummesson, 1991; Judd, 2003; Cadogan et al., 2005). Market orientation however as an operationalisation of the marketing concept, does not have the internal focus on employees, which is necessary for modern product-service industries (Lings, 2004).

According to Lings (1999), firms that incorporate both external and internal market orientation will be more effective in formulating strategic response to market intelligence than firms that focus only on external market orientation. Firms have to cultivate relationships with not only external customers but also employees, and view them as internal suppliers and internal customers (Gummesson, 1994). Thus, the internal relationship between departments needs to be managed as departmental boundaries blur and employees from customer departments access their internal suppliers directly and undertake part of the process of internal service provision (Lings, 1999). From an organisational learning perspective involving the three stages, acquisition, sharing, and utilisation of knowledge, knowledge is not restricted to what

can be obtained from the external environment, but includes what can be gained from the internal environment (Nevis et al., 1995; Srivastava et al., 2001). The focus on internal factors, stressing upon the open transfer of intelligence information in the internal market, facilitates the formation of closer co-operative relationships between departments. This is a prerequisite for successful relationships in the external export market (Cadogan et al., 2005; Zhang et al., 2008).

Employees involved in the value-creation chain relate to each other in an internal supplier-customer relationship milieu (Gummesson, 2008). It reflects the effort to communicate this interdependence to all employees in order to achieve increased levels of productivity, competitive position, customer satisfaction, and customer loyalty, so that sales and profits can grow (Lings and Greenley, 2005; Gounaris, 2006, 2008; Zhang et al., 2008). Also, it affects both jobs and procedures to improve the firm's effectiveness in dealing with customers through interdepartmental integration (Cadogan et al., 2005; Gounaris, 2008; Lings and Greenley, 2009). As a result, successful relationships with network of employees facilitate cooperation and work towards common goals, which help create sustainable competitive advantage and improve export performance (Cadogan et al., 2005; Zhang et al., 2008).

According to Ling and Greenley (2005; 2009), internal market orientation was operationalised in a similar manner to the accepted model of external market orientation (e.g., Kohli and Jaworski, 1990; Kohli et al., 1993; Cadogan et al., 2003; Cadogan et al., 2006). It represents the adaptation of external market orientation to the context of employer-employee interactions in the internal market (Lings and Greenley, 2005, 2009). There are five dimensions of internal market orientation: (1) informal

information generation, (2) formal face-to-face information generation, (3) formal written information generation, (4) information dissemination, and (5) responsiveness (Lings and Greenley, 2005, 2009).

The role of internal market orientation is to facilitate the relationship between company and its employees, as a prerequisite to the development of effective relationships between employees and customers (Ling, 2004). As a means of aligning employees with the external marketing strategy of the firm, internal market orientation creates a potential competitive advantage through developing more satisfied and loyal customers, which in turn should result in an increased market share and profits compared to competitors (Greene et al., 1994; Lings and Greenley, 2005). Furthermore, Abzari et al. (2011) argued that implementation of internal marketing will equip organisations with capabilities and competencies required to generate customer satisfaction, while enjoying environmental opportunities. Therefore, internal market orientation is the integrating mechanism that improves the firm's coordination toward achieving its market objectives. It is thus internal market orientation that enables the development of marketing capabilities throughout the firm (Gounaris, 2006). According to Lings (1999, 2004), internal market orientation closely parallels and complements existing models of external market orientation.

2.3.2.2. Export Market-Based Capabilities

Another element of export marketing resources is the concept of export market-based capabilities. In the RBV theory, there have been several definitions and classifications of capabilities. Collis (1994) classified different definition into three categories: (1) capabilities that reflect an ability to perform the basic functional activities of the firm more efficiently than competitors, (2) capabilities that share the common theme of dynamic improvement associated with the activities of the firm, and (3) capabilities that comprise a more metaphysical strategic insight that enables the firm to recognise the intrinsic value of other resources or to develop novel strategies before competitors. Collis (1994) himself defined capabilities as the socially complex routines that determine the efficiency with which the firm transforms inputs into outputs. According to his definition, capabilities are embedded in the firm's routines and those routines are a product of the organisation as an entire system. Teece and Pisano (1994) also suggested that capabilities are rooted in high performance routines operating inside the firm. Capabilities can be considered as a direct improvement to efficiency and as the ability to conceive of new ways to create value (Collis, 1994; Teece and Pisano, 1994).

Amit and Schoemaker (1993) defined capabilities as a firm’s ability to deploy assets, usually in combination, using organisational processes to affect a desired end. In a similar line of thought, Day (1994) pointed out that capabilities are the complex bundles of skills and accumulated knowledge, exercised through organisational processes, which enable the firm to coordinate activities and make use of its assets. Capabilities are therefore formed through the coordination and integration of organisational processes. Grant (1996) also argued that capabilities are an integrative

process by which tangible and intangible assets come together to create valuable outputs. The firm develops the organisational processes upon which the capabilities are based. These capabilities are integrated across functional lines and are deployed across multiple product markets to deliver competitive advantage.

Capabilities are viewed as an important source of competitive advantage, which can distinguish a firm's strengths from those of other firms (Grant, 1991; Collis and Montgomery, 1998; Krasnikov and Jayachandran, 2008). Teece et al. (1997) stated that sources of competitive advantage based on capabilities can be found in organisational processes, and these processes determine how things are done in a firm. Complementary assets available to a firm shape the firm's processes and thus influence the development of these capabilities (Grant, 1991; Day, 1994; Teece et al., 1997)

The importance of market-based capabilities has been widely acknowledged in the marketing literature. The literature suggested that developing market-based capabilities is an important way to handle the rapidly changing market environments and create competitive advantage (Day, 1994; Morgan et al., 2004; Krasnikov and Jayachandran, 2008; Murray et al., 2011). Based on the literature review, while export market-based assets are the resources endowments a firm has accumulated (e.g., investment in facilities, relationship with strategic partners, and market knowledge), export market-based capabilities are the integrative processes by which available assets are developed, combined, and transformed into value offerings for the export markets. Hence, market-based capabilities capture and reflect how well the firm performs its core marketing processes and enable the firm to add value to its goods

and services, adapt to market conditions, take advantage of market opportunities, and overcome competitive threats (Srivastava et al., 2001; Morgan et al., 2004; Kaleka, 2011). Day (1994) noted that market-based capabilities are the glue that brings assets together and allows them to be deployed advantageously in the markets. Because of this, an integration of tangible assets and intangible assets is required by market-based capabilities (Srivastava et al., 2001). Similarly, Morgan et al. (2009) stated that market-based capabilities are a key market-relating deployment mechanism, enabling the firm to acquire and deploy market-based assets such as market orientation in ways that match the market conditions faced in order to drive firm performance.

The efforts to understand market-based capabilities have long been documented in export performance research. For example, Aaby and Slater's (1989) general model for assessing export performance conceptualised several capabilities; namely, technology, export/market knowledge, planning, export policy, management control, quality, and communication. However, this concept is very wide and does not focus on certain functional areas of the firm. Katsikeas (1994) proposed that export market-based capabilities consist of production, marketing and promotion, product superiority, and competitive pricing. The study included production, but excluded distribution, possibly making this typology incomplete regarding the 4P's framework in traditional marketing literature. Consistent with the 4P's framework, Zou et al. (2003) proposed a reconceptualisation of export market-based capabilities with a particular focus on four functional export marketing elements: pricing, distribution, communication, and product development. Zou et al. (2003) stated that these four crucial elements are not exhaustive, but rather representative of the core function in the marketing mix that can create superior value offerings for customers in the export markets.

More recent literature however suggests that there are three particular types of capabilities which reflect the ability to perform export marketing processes in gaining competitive advantage and superior performance (Morgan et al., 2004; Kaleka, 2011). According to Morgan et al. (2004), export market-based capabilities consist of informational, relationship building, and products development capabilities. First, informational capabilities, which pertain to the ability to gain important market information about customers, competitors, channels, and the broader export market environment, help reduce uncertainty in export marketing. Second, relationship building capabilities with suppliers and other channel members enable better understanding of and response to export market requirements. Third, product development capabilities, which include existing product modification and new product development, have an influence on firm's effectiveness and efficiency in delivering superior value to the target markets. To date, Morgan et al.'s (2004) work is considered a successful export marketing resources framework, providing a sound theoretical basis in applying the RBV in export performance research (Styles et al., 2008; Lages et al., 2009).

2.4 Export Performance

There is a substantial body of research on export performance; however, there are problems with a wide range of export performance determinants used in studies as well as the measures used. This section reviews traditional models of export performance presented by Aaby and Slater (1989), Madsen (1994), and Zou and Stan (1998). Later, the use of export performance measures is discussed, and a summary table which illustrates the different classifications of export performance measures is also included.

2.4.1 Traditional Export Performance Models

Progress in conceptualising and identifying factors that determine export performance has been marked by several significant contributions. Aaby and Slater (1989) introduced the general model for assessing export performance, which has been considered to be the first attempt to categorise the determinants of export performance. This stimulated other researchers in the field such as Madsen (1994) and Zou and Stan (1998) to criticise Aaby and Slater's model and present two additional models, the contingency approach and the internal/external-controllable/uncontrollable model, respectively. The rationale behind discussing these traditional models is that they are extensively cited by several authors in the field.

(1) Aaby and Slater's Model

Aaby and Slater (1989) reviewed fifty-five empirical studies of firm export behaviour published between 1978 and 1988, and combined them to form a broad model for assessing export performance (See Figure 2.8). The framework employed in their study synthesised export knowledge at two broad levels: (1) the external environment level and (2) the firm business strategy and functional level (competencies and firm characteristics). Firm business strategies are composed of major variables such as market selection strategy, sales representative selection, product mixture, product development, sales promotion, pricing, and personnel; firm competencies are composed of technology, knowledge of marketing and exporting, planning, export policy, quality control, and communication; firm characteristics are composed of the firm's size, consensus in management, and acknowledgement of management.

Aaby and Slater's general model has been considered to be the first comprehensive model of export performance. However, they did not focus on export performance per se, but included dimensions which represent areas broader than just export performance such as the exporter/non-exporter dichotomy, propensity to export, and barriers to export (Zou and Stan, 1998). Bijmolt and Zwart (1994) argued that the firm characteristics factor in the model contains a collection of variables that do not have much in common, like firm size, management commitment, and management perceptions. By incorporating management commitment and perceptions into the firm characteristics factor, the focus shifts to the level of the owner/manager (Bijmolt and Zwart, 1994).

Although Aaby and Slater (1989) proposed a general model of causal relationships by reviewing the literature without an empirical test of their proposed framework, their model provides an important backdrop for further research. It is a crucial stepping stone in the export performance literature and gives many researchers guidance to the determinants of export performance (e.g., Styles and Ambler, 1994; Thirkell and Dau, 1998; Zou and Stan, 1998; Wheeler et al., 2008). Wheeler et al. (2008), for example, advanced Aaby and Slater's (1989) work further in an integrative model, based on UK firms of all sizes, that includes internal environment factors (firm characteristics and resource base, and firm competencies and strategies), external environment factors (external opportunities and threats), and measures of success (financial, non-financial and composite scales). Their evaluation of recent empirical research on key influences of export performance showed the importance of managerial, resource/competency-related and relationship-based factors on firm-level export performance.

Figure 2.8: General Model for Assessing Export Performance and Variables

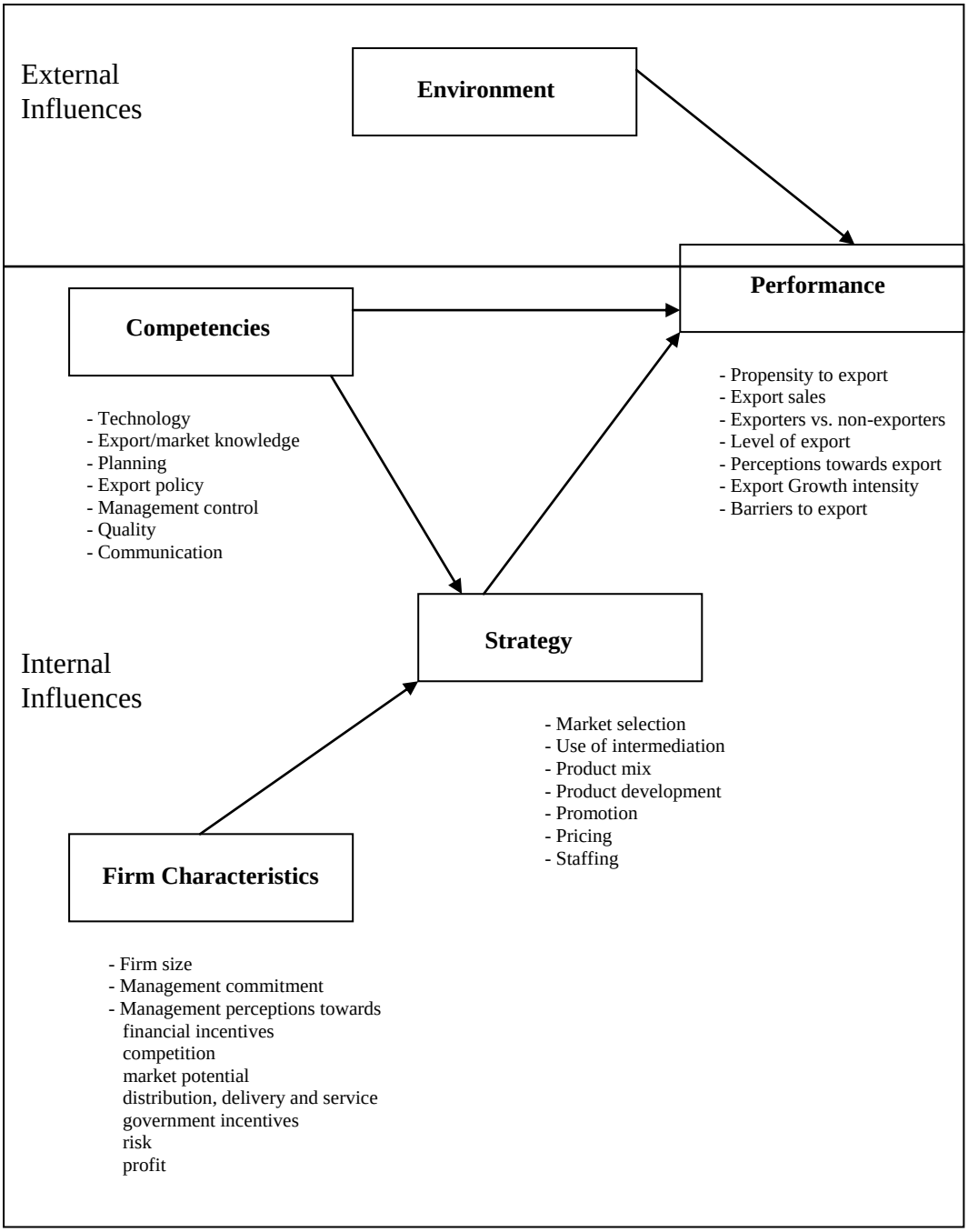

Source: Aaby and Slater (1989, p. 9)

(2) Madsen's Contingency Approach

One response to the inconsistencies in the export literature regarding the importance of export success antecedents is the contingency theory (Madsen, 1994; Katsikeas et al., 2000). For example, Walters and Samiee (1990, p. 35) supported the contingency approach and asserted that it is "a perspective that emphasises the importance of the exporter's contextual situation offers a fruitful approach to a better understanding of determinants of export success." This implies that prescriptions for export success need to be taken of the nature of the firm's business position and the environmental context.

According to this approach, exporting is perceived as the firm's strategic response to the interplay of internal as well as external factors (Madsen, 1989, 1994; Robertson and Chetty, 2000). The contingency approach is based on two main premises. First, there is no single structure appropriate for all tasks (Madsen, 1994). Second, although wide variations regarding effectiveness could possibly be observed, these variations are not random (Robertson and Chetty, 2000). Effectiveness depends on the appropriate matching of organisational factors to fit the firm's context (Madsen, 1994; Robertson and Chetty, 2000).

Madsen (1994) developed a model of the contingency approach to export performance as shown in Figure 2.9.

Figure 2.9: The Contingency Approach to Export Performance

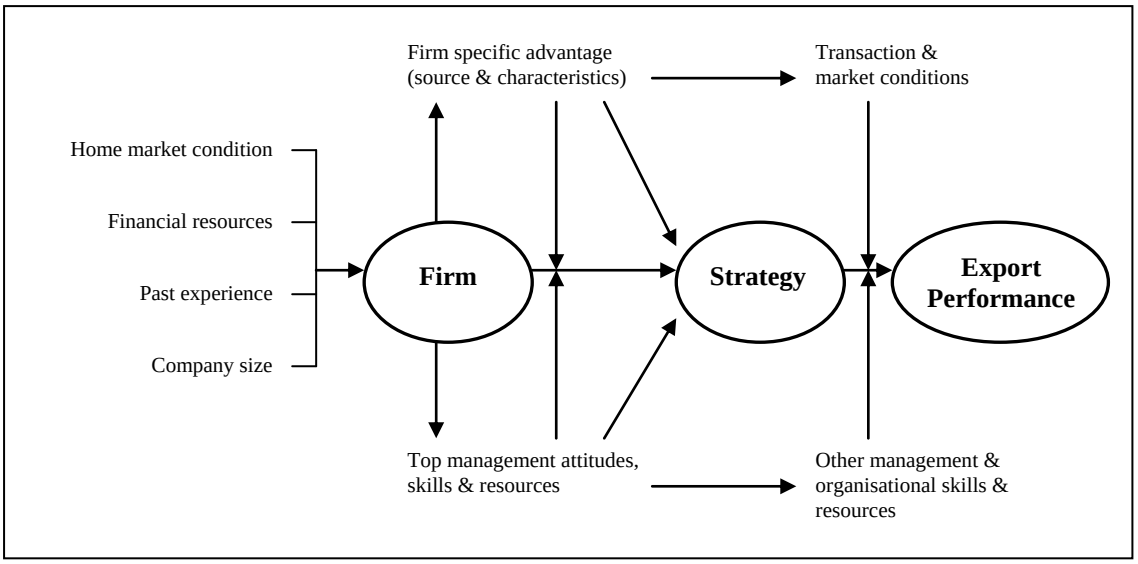

Source: Madsen (1994, p. 29)

The basic assumption of Madsen's (1994) model is that the firm acts under certain financial constraints and that the firm's home market conditions, its past experience, and its size affect the firm's top management attitudes, skills, and resources as well as the firm's specific advantage. Both the financial status and home market conditions, along with their consequences are responsible for the choice of strategy and its appropriateness. Top management attitudes, skills, and resources are responsible for creating other management, organisational skills, and resources, which in turn moderate the quality of strategy implementation. On the other hand, firm-specific advantage affects transaction and market conditions, which in turn moderate the appropriateness of a particular strategy. Finally, export performance appears to be influenced either directly or indirectly by all the elements in the model. Accordingly, it is highly unlikely that one export strategy could be suitable for all situations and in all contexts.

(3) Zou and Stan's Categorisation

Zou and Stan (1998) reviewed and evaluated fifty studies published between 1987 and 1997 that focus particularly on export performance and accordingly proposed a model of determinants of export performance (See Table 2.3). Unlike Aaby and Slater's (1989) model, the factors in Zou and Stan's categorisation include variables that are consistent with each other and reflect and describe the factor itself. The determinants of export performance are classified in the form of a 2x2 matrix: internal (export marketing strategy, management attitudes and perception, management characteristics, and firm's characteristics and competencies) versus external (industry characteristics, foreign market characteristics, and domestic market characteristics) and controllable (export marketing strategy and management attitudes and perceptions) versus uncontrollable (management characteristics, firm's characteristic and competencies, industry characteristics, foreign market characteristics, and domestic market characteristics).

Zou and Stan's (1998) work has been considered as a comprehensive and detailed guideline to identify the major determinants of export performance, and recent comprehensive reviews in the field are based largely upon their categorisation (e.g., Leonidou, et al. 2002; Sousa, 2008). Sousa et al. (2008), in their review of fifty-two studies published between 1998 and 2005, classified the determinants of export performance into factors, internal and external to the firm. In terms of internal factors, they are divided into management-related attributes and resources, firm characteristics and resource base, and firm competencies and strategies. The external factors include the industry, domestic and foreign markets, and other aspects that are external to the firm. While offering more description and specificity, their categories are thematically

in line with Zou and Stan's (1998) original categorisation. Hence, the validity and relevance of these themes are reinforced in terms of their importance to the export firm.

Table 2.3: Determinants of Export Performance

	Internal	External
Controllable	**Export Marketing Strategy** General export strategy Export planning Export organisation Market research utilisation Product adaptation Product strengths Price adaptation Price competitiveness Price determination Promotion adaptation Promotion intensity Distribution channel adaptation Distribution channel relationships Distribution channel type **Management Attitudes and Perceptions** Export commitment and support International orientation Proactive export motivation Perceived export advantages Perceived export barriers **Management Characteristics** Management's international experience Management's education/experience	
Uncontrollable	**Firm's Characteristics and Competencies** Firm's size Firm's international competence Firm's age Firm's technology Firm's characteristics Firm's capabilities/competency	**Industry Characteristics** Industry's technological intensity Industry's level of instability **Foreign Market Characteristics** Export market attractiveness Export market competitiveness Export market barriers **Domestic Market Characteristics** Domestic market

Source: Zou and Stan (1998, p. 343)

To sum up, the literature review reveals that research on export performance still remains underdeveloped, and the literature is burdened with a large and fragmented number of export performance antecedents. Furthermore, the export marketing literature has been criticised for providing fragmented results and for not being able to develop a sound theoretical model of export performance, thus limiting theoretical advancement in this field (Zou and Stan 1998; Baladauf et al, 2000; Morgan et al., 2004).

Although export performance has been widely researched over the last decades, such research has often been undertaken without a strong theoretical platform (Morgan et al., 2004; Sousa et al., 2008). To some extent, the majority of theoretical and empirical contributions to the export performance literature are based on the SCP paradigm or atheoretical models, which provide some insights into several factors associated with export success (Zou and Stan, 1998; Styles et al., 2008). However, far less research attention has been paid to the process of building competitive advantage in export markets (Kaleka, 2002; Navarro et al., 2010). In the light of these issues, the RBV paradigm, which highlights the importance of firm-specific assets and capabilities in explaining firms' competitive advantage and superior performance, could provide additional theoretical and managerial insights into the export performance model.

2.4.2 Export Performance Measurement

Export performance has been extensively studied in export marketing. However, appropriate export performance measurement is a topic that has been debated in the literature. The literature reflects remarkable inconsistency in defining export performance, and a large variety of elements are adopted in export performance studies (Cavusgil and Zou, 1994; Sousa et al., 2004).

Measuring export performance is a fundamental research issue, and the debate on the measurement of export performance centres on two types: objective and subjective measures, (Mathyssens and Pauwels, 1996; Styles, 1998; Sousa, 2004, Sousa et al., 2008). Objective measures include export sales, export growth, and export profitability, whereas subjective measures focus on manager's self-perceptions of performance. Although objective measures are usually the first preference of researchers, confidentiality reasons and difficulty in obtaining the required data from published sources are problems associated with this type of data (Francis and Collins-Dodd, 2000; Robertson and Chetty, 2000). Using objective measures also creates problems of comparisons across firms because of the differences in accounting and sales recording procedures (Style, 1998; Lages and Lages, 2004). Moreover, there is no standard to judge whether the firm has exploited all the profitable opportunities available and hence raises doubts about what the data represents (Cavusgil, 1984). On the other hand, subjective measures have been shown to be valid indicators of performance since subjective and objective measures are positively correlated (Dess and Robinson, 1984; Baldauf et al., 2000), and decision makers are guided by their subjective perceptions of firm export performance rather than by objective, absolute performance ratings (Madsen, 1989; Katsikeas et al., 2000).

Another debate about measuring export performance is the use of single versus multiple measures. Although, traditionally, export success has been measured using a single indicator such as export sales or export intensity, these measures have been criticised by many researchers as they are heavily influenced by demographic characteristics and a measurement scale constructed from a set of variables (Reid, 1983). Furthermore, research that only considers a single dimension of performance is more likely to produce misleading results that hinder theory building (Dominguez and Sequeria, 1993; Lumpkin and Dess, 1996). Thus, recent performance studies used multiple measures along two or three sub-dimensions (e.g., Zou et al., 1998; Cadogan and Cui, 2004; Morgan et al., 2004). Such practice is based on a number of reasons. First, to enhance the accuracy of exporting studies by realising the strengths of each indicator and minimise the impact of their shortcomings and by improving the explanatory power between independent and dependent variables of performance (Evangelista, 1994). Second, multi-indicator measures are believed to be more reliable and have less measurement error than single item measures (Churchill, 1987). Finally, using multiple measures provides a better picture of export performance to compare different aspects of strategic and operational phenomena (Dominguez and Sequeria, 1993; Sousa, 2004; Sousa et al., 2008). As a result, there is increasing agreement that export performance is a complex multidimensional construct where no one criterion is adequate to provide a reliable assessment (Zou et al., 1998; Katsikeas et al., 2000; Morgan et al., 2004).

The considerable diversity of both conceptual and operational measures of export performance indicate that there is no uniform accepted conceptualisation and

operationalisation of export performance in marketing and international business literature (See Table 2.4).

Table 2.4: Classification of Export Performance Measures

Performance Measures	Illustrative Studies
ECONOMIC MEASURESE	
Sales-related	
Export Sales Ratio	Sriram et al. (1989); Lee and Yang (1990); Samiee and Walters (1990); Louter et al. (1991); Czinkota and Ursic (1991); Dominguez and Sequeira (1993); Beamish et al. (1993); Kaynak and Kuan (1993); Diamantopoulos and Schlegelmilch (1994); Das (1994); Namiki (1994); Shoham and Albaum (1994); Styles and Ambler (1994); Bijmolt and Zwart (1994); Sriram and Manu (1995); Holtzmuller and Stottinger (1996); Baldauf et al. (2000); Robertson and Chetty (2000); Dean et al. (2000); Cadogan et al. (2003); Cadogan and Cui (2004)
Export Sales Growth	Madsen (1989); Dichtl et al. (1990); Dominguez and Sequeira (1993); Cavusgil and Zou (1994); Das (1994); Naidu and Prasad (1994); Namiki (1994); Shoham and Albaum (1994); Styles and Ambler (1994); Johanson and Arunthanes (1995); Zou et al. (1998); Style (1998); Shaw (2000); Dean et al. (2000); Covin et al. (2006); Murray et al. (2007)
Export Sales Volume	Madsen (1989); Chan (1992); Dominguez and Sequeira (1993); Cavusgil and Kirpalani (1993); Kaynak and Kuan (1993); Shoham and Albaun (1994); Styles and Ambler (1994); Axinn et al. (1996); Doulas (1996); Piercy et al. (1998); Zou et al. (1998); Shoham (1998); O'Donnell and Jaong (2000); Baldauf et al. (2000); Dean et al. (2000); Rose and Shoham (2002); Morgan et al. (2004); Murray et al. (2007), Koksal and Ozgul (2010)
Export sales per employee	Diamantopoulos and Schlegelmilch (1994); Cadogan et al. (2003); Cadogan and Cui (2004)
Export sales per export manager	Diamantopoulos and Schlegelmilch (1994)
Export sales per country exported to	Cadogan et al. (2003); Cadogan and Cui (2004)
Contribution of exporting to sales revenue stability	Raven et al. (1994)
Export sales volume of new products	Atuahene-Gima (1995b)
Percentage of sales revenue derived from products introduced in the export market	Morgan et al. (2004)
Export sales ratio growth	Naidu and Prasad (1994); Shoham and Albaum (1994); Styles and Ambler (1994); Holzmuller and Stottinger (1996); Robertson and Chetty (2000); Cadogan et al. (2003); Cadogan and Cui (2004)
Return on sales	Zou et al. (2003)
Profit-related	
Export profitability	Madson (1989); Lee and Yang (1990); Louter et al. (1991); Beamish et al. (1993); Kaynak and Kuan (1993); Bijmolt and Zwart (1994); Namiki (1994); Cavusgil and Zou (1994); Johanson and Arunthanes (1995); Axinn et al. (1996); Piercy et al. (1998); Shoham (1998); Style (1998); Robertson and Chetty (2000); Rose and Shoham (2002); Cadogan et al. (2003); Zou et al. (2003); Cadogan and Cui (2004); Morgan et al. (2004), Koksal and Ozgul (2010)
Export profitability growth	Cavusgil and Zou (1994); Naidu and Prasad (1994); Style (1998); Shaw (2000)
Export profit ratio	Kaynak and Kuan (1993); Sriram and Manu (1995).
Contribution of export to profits	Louter et al. (1991); Cavusgil and Kirpalani (1993); Raven et al. (1994); Zou et al. (1998); Murray et al. (2007)
Export profit growth of new products	Atuahene-Gima (1995)
Export margins	Zou et al. (2003)
Market share-related	
Export market share growth	Shaw (2000)

Market share	Cavusgil and Kirpalani (1993); Johanson and Arunthanes (1995); Sriram and Manu (1995); Piercy et al. (1998); Zou et al. (1998); O'Donnell and Jeong (2000); Morgan et al. (2004); Murray et al. (2007), Koksal and Ozgul (2010)
NON-ECONOMIC MEASURES	
Product-related	
New products exported	Singer and Czinkota (1994); Atuahene-Gima (1995b)
Proportion of product groups exported	Diamantopoulos and Schleglemilch (1994)
Contribution of exporting to product development	Raven et al. (1994); O'Donnell and Jeong (2000)
Market-related	
Export country market number	Samiee and Walters (1990); Shoham and Albaum (1994)
Export market penetration	Singer and Czinkota (1994); Styles and Ambler (1994)
New market exports	Singer and Czinkota (1994)
Contribution of exporting to market development	Raven et al. (1994); O'Donnell and Jeong (2000)
Distributor-related	
Service quality	Morgan et al. (2004)
Quality of your company's relationship with distributor	Morgan et al. (2004)
Reputation of your company to distributor	Morgan et al. (2004)
Distributor loyalty to your company	Morgan et al. (2004)
Overall satisfaction with your total product/service offering to distributor	Morgan et al. (2004)
End user-related	
Quality of your company's end user customer relationships	Morgan et al. (2004)
Reputation of your company to end user	Morgan et al. (2004)
End-user customer loyalty to your firm	Morgan et al. (2004)
End-user customer satisfaction	Morgan et al. (2004)
MISCELLANEOUS	
Contribution of exporting to scale economies	Raven et al. (1994)
Contribution of exporting to company reputation	Raven et al. (1994)
Projection of export involvement	Diamantopoulos and Schlegelmilch (1994)
Return on investment	Zou et al. (2003)
GENERIC MEASURES	
Perceived export success	Sriram et al. (1989); Louter et al. (1991); Cavusgil and Zou (1994); Shoham and Albaum (1994); Zou et al. (1998); Style (1998); Murray et al. (2007)
Satisfaction with overall export performance	Evangelista (1994); Schoham and Albaum (1994); Bijmolt and Zwart (1994); Zou et al. (1998); Calantone et al. (2006); Murray et al. (2007)
Achievement of export objectives	Cavusgil and Kirpalani (1993); Cavusgil and Zou (1994); Naidu and Prasad (1994); Katsikeas et al. (1996); Style (1998)
Contribution of the export firm to the firm's competitiveness	Zou et al. (1998)
Contribution of the export firm to the firm's strategic position	Zou et al. (1998)
The degree to which the firm is meeting expectations	Zou et al. (1998); Murray et al. (2007)

Source: Compiled by author

Nevertheless, there is a broad agreement on the use of multiple dimensions and measures of export performance to capture all of the intricacies of this construct. Cavusgil and Zou (1994) integrated the export marketing literature and developed an export performance scale as a composite of sale growth and profitability, achievement of strategic objectives, and perception of success. Zou et al. (1998) introduced the EXPERF scale, which contains three categories of measures: (1) financial export

performance, (2) strategic export performance, and (3) satisfaction with export performance. Katsikeas et al. (2000) used a three-way categorisation, which comprise economic (sales-related, profit-related, market share-related), non-economic (market-related, product-related, and miscellaneous), and generic measures (degree of satisfaction, perceived export success, and degree to which export objectives have been fulfilled). More recently, Morgan et al. (2004) however argued that distributors and end-user customers should be the strategic elements of export performance because export firms have to often monitor their performance with respect to desired customer attitudes and behaviour (e.g., customer satisfaction) and those of channel intermediaries (e.g., distributor loyalty).

2.5. Chapter Summary

The industry-based theory has been discussed, with respect to the traditional industrial organisation economics and the Porterian view of competition. According to the main idea of this structure–conduct–performance (SCP) paradigm, structure determines conduct, which in turn determines performance. Structure refers to the industry structure or the five forces that can be characterised by a number of competitors in an industry, the heterogeneity of products, cost structure, and entry barriers. Conduct refers to specific actions taken by a firm in an industry including price taking, advertising, product differentiation, and exploiting market power. Performance is related to individual firms as well as economy as a whole. The belief is that the firm must first identify the core competitive forces within its market/industry. Then, the firm needs to make appropriate strategic choice to build a competitive position in its market/industry. In spite of its popularity in the strategic management literature, the SCP paradigm has been subject to many criticisms. The focus on external industry factors instead of a firm's internal factors has been questioned by many strategy theorists. This paradigm shift began with evidence that the differences in firm profitability are not based on the structural characteristics of an industry, but rather on the unique endowments of resources found in independent firms. This resulted in the emergence of the resource-based view of the firm (RBV).

The central theme of the RBV has then been discussed. Unlike the SCP paradigm, the RBV suggests an inward look at the firm in order to provide an understanding of what makes a firm uniquely capable of sustaining competitive advantage and superior performance. The RBV paradigm is based on the premise that firms are bundles of

heterogeneous, imperfectly mobile resources and emphasises the rents or returns that firms earn on extant resources. Competitive advantage therefore stems from a comparative advantage in firms' internal resources. The RBV highlights the important role of firm-specific assets and capabilities in clarifying why some firms can outperform other firms. Nowadays, the RBV is seen as the most influential framework for understanding strategic management.

The RBV could offer a pattern for convergence in the strategic management and marketing literature. Firms can create greater advantage by combining, developing, and utilising their marketing resources to create more valuable results than competitors. In the light of this call, the literature review of marketing resources and export marketing resources have also been discussed. Notwithstanding a growing RBV literature dedicated to advancing export marketing theory and practice, there are a number of obvious issues that call for further theoretical and empirical attention. There is a need for a more sophisticated understanding of the nature of export marketing resources in action in order to gain competitive advantage and superior return. These export marketing resources are tangible and intangible (relational and intellectual) export market-based assets and capabilities.

Tradition export performance models, with reference to Aaby and Slater's, Madsen's, Zou and Stan's, and other subsequent studies, have also been discussed. The exporting literature is burdened with a large and fragmented number of export performance antecedents, and the majority of theoretical and empirical contributions in the export performance literature are based on the SCP paradigm or atheoretical models. It is evident that the RBV paradigm, which highlights the importance of firm-

specific assets and capabilities in explaining firms' competitive advantage and superior performance, could provide additional theoretical and managerial insights into the export performance models. Finally, the use of export performance measures has also been illustrated, and a summary table of export performance has been provided.

CHAPTER 3: CONCEPTUAL FRAMEWORK AND HYPOTHESES DEVELOPMENT

This chapter is organised into two sections. The first section presents a conceptual framework grounded in a review of the extant literature, and the second section provides a detailed discussion of the hypotheses development. Figure 3.1 shows the outline of the chapter.

Figure 3.1: Outline of Thesis Structure

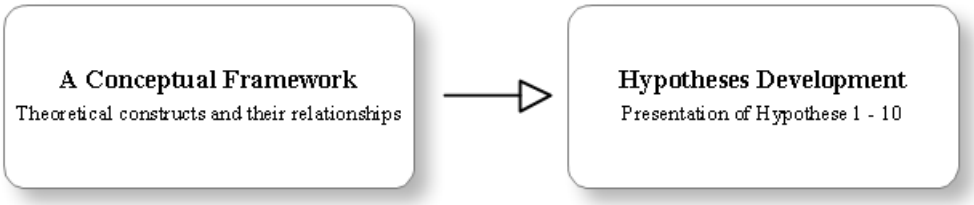

3.1 A Conceptual Framework

The RBV has a central focus on the exploitation of firm resources in order to gain competitive advantage that affords the accrual of superior performance (Wernerfelt, 1984; Barney, 1991; Collis and Montgomery, 1998; Newbert, 2007; Becerra, 2008; Kraaijenbrink et al., 2010). However, developing an all-inclusive list of resources is a daunting if not an impossible task given the diverse and disjointed conceptual definition in the extant literature (Fahy, 2000; Hoopes et al., 2003). Caloghirou et al. (2004) noted that research on firm-specific resources has not reached maturity. The existing literature lacks widely accepted and consistent operationalisations of the relevant constructs. The main reason for the ambiguity is that the constituents,

boundaries, and definitions of resources vary considerably, according to the viewpoint of different interest groups (Galbreath, 2005; Nothnagel, 2008). Furthermore, the RBV has brought great richness to the analysis of competitive advantage, but still has some important limitations and lags in its conceptualisation that, to some extent, can be filled by drawing from other business disciplines. For example, the RBV does not currently explain which resources should be bundled under the same administrative framework (Becerra, 2009).

An opportunity presents itself to link the RBV and marketing. Drawing upon the RBV, marketing theorists addressed the fundamental challenge of organisational survival by determining what resources give rise to competitive advantage and how they can be sustained (Day, 1991; Hunt and Morgan, 1995; Srivastava et al., 2001). The RBV has then become a major focus among marketing scholars, and a new direction of marketing literature has recently emerged, drawing on marketing resources. Scholars have proposed several configurations and classifications of marketing resources: market-based capabilities (Day, 1994), market-based assets (Srivastava et al., 1998; Srivastava et al., 2001), and marketing assets and capabilities (Hooley et al., 1998; Hooley et al., 2001). Despite the importance of these marketing resources, there is a general lack of the RBV frameworks to help develop competitive strategies in an export context (Peng, 2001; Morgan et al., 2004).

The present study seeks to shed light on this issue. A review of extant literature suggests that four dimensions of marketing resources are the most critical determinants of a firm's success in an export context: (1) tangible export market-based assets, (2) relational export market-based assets, (3) intellectual export market-based assets, and (4) export market-based capabilities. In spite of the efforts in

understanding these export marketing resources, an integrative and empirically tested framework is still not available. The study offers an alternative to the previous export performance models as a way of looking at the idiosyncratic nature of a firm's assets and capabilities. Responding to recent calls for research (e.g., Balabanis et al., 2004; Ketchen et al., 2007; Newbert, 2007; Kraaijenbrink et al., 2010), the study moves beyond a simple resources - performance link and attempts to develop and test a conceptual framework that fully captures the intricacies of export marketing resources and their performance implications.

A conceptual framework underpinning the study seeks to clearly identify the internal processes by which export marketing resources (tangible and intangible assets and capabilities) influence performance in the export context. According to Becerra (2009), firms do not have superior performance because they have superior resources, which is an oversimplified conclusion from the resource-based perspective. Similarly, Ketchen et al. (2007) and Murray et al. (2011) stated that firms do not achieve performance simply because of their resources. Rather, firms achieve performance because they are able to convert the positive aspects of their resources into something valuable, which in turn affect performance. By using the RBV framework as an interpretive lens, the study examines the mediating role of competitive advantage in assets/capabilities - performance relationships (Collis an Montgomery, 1995; Srivastava et al., 1998; Fahy and Smithee, 1999; Srivastava et al., 2001; Peteraf and Barney, 2003; Morgan et al., 2004; Barney and Clark, 2007; Newbert, 2007; Becerra, 2009) and capabilities in assets - competitive advantage relationships (Grant, 1991; Day, 1994; Srivastava et al., 1998; Srivastava et al., 2001; Krasnikov and Jayachandran, 2008). In addition, the study further investigates how intangible

(relational and intellectual) assets moderate the effects of tangible assets - capabilities relationships (Srivastava et al., 1998; Becerra, 2008). Hence, a comprehensive adaptation of the RBV theory has the potential of bridging the knowledge gap in the literature.

As a result, this study aims to investigate the sources of competitive advantage and superior performance by focusing on export market-based assets and capabilities. Export market-based assets can be defined as the resource endowments that the firm has acquired or built over time and that can be deployed to advantage in the export markets (Srivastava et al. 1998; Fahy and Smithee, 1999; Srivastava et al., 2001; Hooley et al., 2001; Zou et al., 2003). Export market-based assets consist of not only tangible market-based assets but also intangible (relational and intellectual) market-based assets (Srivastava et al. 1998; Srivastava et al., 2001). On the other hand, export market-based capabilities are the integrative processes by which available assets are developed, combined, and transformed into value offerings for the export markets (Day, 1994; Morgan et al., 2004; Kaleka, 2011). The standpoint of the study is that a firm's competitive strategies are based on the deployments of its export market-based assets and capabilities. Differences in firm success can be explained by differences in these export marketing resource deployments.

The scope of the study is governed by a conceptual framework presented in Figure 3.2. There are three main components of the framework: (1) export marketing resources including tangible export market-based assets, relational export market-based assets, intellectual export market-based assets, and export market-based capabilities, (2) export competitive advantage, and (3) export performance.

Figure 3.2: A Conceptual Framework & Hypotheses

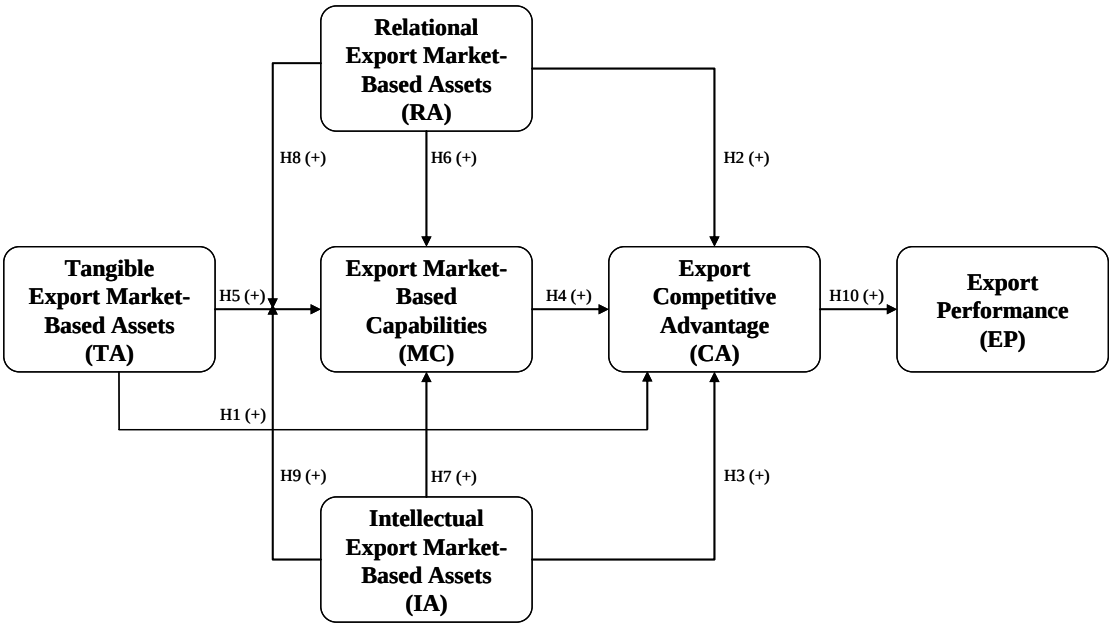

The starting points in the framework are tangible export market-based assets (TA), relational export market-based assets (RA), and intellectual export market-based assets (IA). By exploiting and combining these export market-based assets, a firm should be able to build export market-based capabilities (MC), gain export competitive advantage (CA), and ultimately achieve export performance (EP). In addition, the framework contends that the differential ability of firms to transform tangible export market-based assets (TA) into export market-based capabilities (MC) lies in their relational and intellectual export market-based assets (IA and RA). The hypotheses formulated from the framework are delineated towards explaining the links between these theoretical constructs.

3.2 Hypotheses Development

The main assertion of the RBV is its focus on the firm and the need of the firm to develop and combine resources to achieve competitive advantage (Collin and Montgomery, 1998; Srivastava et al., 2001; Newbert, 2007; Lockett et al., 2009; Kraaijenbrink et al., 2010). Tangible assets as complementary resources are needed to contribute towards the firm's competitive advantage (Hunt and Morgan, 1995, Fahy and Smithee, 1999; Fahy, 2002; Foss and Knudsen, 2003; Barney and Clark, 2007).

According to Srivastava et al. (1998), tangible assets can be leveraged by firms to (1) lower costs by enhancing productivity, (2) enhance revenues through higher price; for example, superior equipment lead to superior product functionality, features, and durability, (3) serve as a barrier to entry or mobility barrier because other firms must make similar investments, (4) provide a competitive edge to the extent that they make other assets more valuable, and (5) provide managers with options; for example, if the plant or equipment can be shared across products. There are many examples of firms having attained and sustained competitive advantage by means of tangible assets (Foss, 1997; Fahy, 2002; Becerra, 2008). Piercy et al. (1998) reported that making tangible assets, including physical assets, scale of operation, and financial assets, available for export firms is highly correlated with their competitive advantage. These tangible export market-based assets enable firms to efficiently compete on price, product, and service factors against competitors in foreign markets (Piercy et al., 1998). Morgan et al. (2004) also found a positive relationship between tangible export market-based assets and export competitive advantage. Based on the above discussion, it is hypothesised that:

Hypothesis 1: There will be a positive relationship between tangible export market-based assets and export competitive advantage.

Relational export market-based assets are the bonds between the export firm and external stakeholders. These assets stem from the relationships the firm has with external stakeholders, including suppliers, retailers, customers and other strategic partners, and are often based on factors such as trust and commitment (Srivastava et al., 2001; Olkkonen et al., 2007; Styles, 2008). This implies that there is an opportunity for firms to develop relationships that may be both relatively rare and difficult to imitate, which are the criteria for advantage-generating resources (Srivastava et al., 2001; Ling-Yee, 2007). Gulati et al. (2000) also supported this view and highlighted the importance of resources shared among industry incumbents through business relationships. The crucial role of the inter-firm ties is to gain access to resources such as information, access, capital, goods, and services, to improve firms' strategic positions, and to reach new markets. In addition, these relationships enable firms to learn new skills, gain legitimacy, control transaction costs, reduce contract cost, and thus add value to business activities and processes (Johnson and Raven, 1996; Gulati et al., 2000; Srivastava et al., 2001; Fang et al., 2008; Matanda and Freeman, 2009). These relationships provide export firms with the potential to maintain and enhance their competitive advantage and superior return (Gulati et al., 2000; Balabanis et al., 2004; Matanda and Freeman, 2009).

By developing close relationships with supply chain and strategic alliance partners, export firms have an opportunity to grow their business through a collaboration-based strategy (Zhang et al., 2003; Balabanis et al., 2004; Matanda and Freeman, 2009). For

example, supply chain collaboration can create competitive advantage through mechanisms such as increased market access, better material sources, and cost-effective transportation (Simatupang and Sridharan, 2002; Slack et al., 2007; Matanda and Freeman, 2009). International strategic alliances, which combine strengths of the partners, also permit each to perform better in international markets as the partners may contribute marketing knowledge and skills, production technology, manufacturing competency, and provide access to financial resources and distribution channels (Johansson, 1995; Hitt et al., 2000; Zhang et al., 2003). Srivastava et al. (1998) and Ling-Yee and Ogunmokun (2001) also argued that relational market-based assets produce multidirectional information flows, technical collaboration, and know-how that enable firms to ensure quality products at reasonable prices or premium price, deliver them in a timely schedule, and hence contribute to the attainment of competitive advantage. Based on the above discussion, it is hypothesised that:

Hypothesis 2: There will be a positive relationship between relational export market-based assets and export competitive advantage.

Intellectual export market-based assets are the knowledge about internal and external market environments which reside within the export firm. Intellectual market-based assets include many classes and types of knowledge regarding both external and internal environments, know-how embedded in individuals or units' skills, and know-how to leverage intraorganisational relationships (Srivastava et al., 2001). They also include detailed knowledge that the firm and its employees possess, and can be used

to denote all aspects of personal tacit and explicit marketing knowledge (Srivastava et al., 2001).

Srivastava et al. (2001) stated that the ability to generate and sustain customer value and competitive advantage and in turn leverage firm performance is through the recognition of market orientation or market knowledge as intellectual market-based assets. Firms facing market heterogeneity regarding demand and supply stand to benefit greatly from adopting market orientation, which advocates systematic acquisition, dissemination, and use of intelligence information to develop and market the appropriate goods and services that are valued by their customers in the markets (Kohli and Jaworski, 1990; Slater and Narver, 1994; Cadogan and Diamantopoulos, 1995; Hunt and Morgan, 1995; Srivastava et al., 2001; Langerak, 2003; Lings, 2004; Lings and Greenley, 2005).

A firm's competitive advantage will be gained through the external and internal knowledge accumulation (i.e., external and internal market orientation) (Cadogan and Diamantopoulos, 1995; Lings, 1999; Leonidou and Theodosiou, 2004). There is accumulating evidence of a strong relationship between the knowledge about internal and external market environments and competitive advantage (Akimovo, 2000; Langerak, 2003; Lings and Greenley, 2005; Murray et al., 2011). Thus, it could be argued that intellectual export market-based assets enable firms to produce value-added offerings for given export markets. As a result, firms are well positioned to develop products and ancillary services that cost effectively satisfy export customer needs and preferences. Based on the above discussion, it is hypothesised that:

Hypothesis 3: There will be a positive relationship between intellectual export market-based assets and export competitive advantage.

Export marketing resources also include export market-based capabilities, which are the combination of informational, relationship building, and product development capabilities (Morgan et al., 2004). They are the integrative processes by which available assets are developed, combined, and transformed into value offerings for the market (Day, 1994; Vorhies et al., 1999; Vorhies and Morgan, 2003). Market-based capabilities capture and reflect how well a firm performs its core marketing processes and enable the firm to add value to its goods and services, adapt to market conditions, take advantage of market opportunities, and overcome competitive threats (Day, 1994; Srivastava et al., 2001; Krasnikov and Jayachandran, 2008). Capabilities are viewed as an important source of competitive advantage and can distinguish a firm's strength from that of other firms (Grant, 1991; Collis and Montgomery, 1998; Krasnikov and Jayachandran, 2008).

Many scholars have made a connection between market-based capabilities and competitive advantage. Piercy et al. (1998) found that in comparison to exporters with a low level of competitive advantage, exporters with a high level of competitive advantage tend to posses superior export market-based capabilities. Morgan et al. (2004) also discovered a positive relationship between these capabilities and export competitive advantage. Therefore, export market-based capabilities enable firms to add value to their offerings to export markets and hence create competitive advantage. Based on the above discussion, it is hypothesised that:

Hypothesis 4: There will be a positive relationship between export market-based capabilities and export competitive advantage.

According to Grant (1991) and Teece et al. (1997), a firm's assets are the source of capabilities, and capabilities are the main source of its competitive advantage. Tangible and intangible assets are assumed within the RBV theory to provide the input that is combined and transformed by capabilities. In other words, market-based capabilities are the glue that brings tangible and intangible assets together and enable them to be deployed advantageously in the market (Day, 1994; Zou et al., 2003). Empirically, Piercy et al. (1998) found a strong relationship between tangible export market-based resources, including physical assets, scale of operation, and financial assets, and export market-based capabilities. Morgan et al. (2004) also reported that these tangible market-based assets are employed as an integrated whole to contribute to export market-based capabilities, and hence these market-based capabilities allow for the development of export competitive advantage. Thus, tangible export market-based assets can contribute to firms' competitive advantage by giving rise to export market-based capabilities. Based on the above discussion, it is hypothesised that:

Hypothesis 5: There will be a positive relationship between tangible export market-based assets and export market-base capabilities.

Relational and intellectual market-based assets are also essential sources of market-based capabilities (Srivastava et al., 1998; Srivastava et al., 2001). Without knowledge of and relationships with external entities such as channels, suppliers, customers and other strategic partners, market-based capabilities in organisational

processes cannot be created or leveraged (Srivastava et al., 1998). Relational and intellectual market-based assets combine to form the foundation for market-based capabilities (Srivastava et al., 2001). For example, market-based capabilities (e.g., the ability to develop new product configurations that give distinct customer benefits) typically stem from a variety of relational market-based assets (e.g., linkages to raw material and technology suppliers) and intellectual market-based assets (e.g., knowledge of customers' preferences) (Srivastava et al., 2001). Morgan et al. (2004), Gounaris (2006), and Murray et al. (2011) also supported this view and highlighted the important role of these assets as inputs to export market-based capabilities. For example, export market knowledge assets can be leveraged with complementary product development capabilities to create superior value offerings for the export markets. Therefore, relational and intellectual export market-based assets can also contribute to firms' competitive advantage by giving rise to export market-based capabilities. Based on the above discussion, it is hypothesised that:

Hypothesis 6: There will be a positive relationship between relational export market-based assets and export market-based capabilities.

Hypothesis 7: There will be a positive relationship between intellectual export market-based assets and export market-based capabilities.

Relational and intellectual market-based assets are also necessary to invigorate and unleash the customer value-generating potential embedded in tangible assets (Srivastava et al., 1998; Srivastava et al., 2001). For example, relational market-based assets such as strong strategic partners enable firms to commit human resources

(employees in scale of operation) in an entrepreneurial manner for the development of new products and customising existing solutions for target customers (Srivastava et al., 1998). In addition, intellectual market-based assets, such as knowledge of customers' changing tastes and buying criteria, enable firms to adapt their plant, equipment, and raw materials (physical assets) to produce new products demanded by different groups of customers (Leonard-Barton, 1995; Srivastava et al., 1998). Thus, it could be argued that relational and intellectual export market-based assets are required to release the value of tangible market-based assets in building export market-based capabilities. When these relational and intellectual assets are implemented, firms can achieve maximum benefits from their tangible assets. Based on the above discussion, it is hypothesised that:

Hypothesis 8: The effect of tangible export market-based assets on export market-based capabilities is higher for export firms that have high relational export market-based assets than for export firms that have low relational export market-based assets.

Hypothesis 9: The effect of tangible export market-based assets on export market-based capabilities is higher for export firms that have high intellectual export market-based assets than for export firms that have low intellectual export market-based assets.

The value of export marketing resources must be reflected in superior performance which is attained through the achievement and exploitation of firms' competitive advantage over competitors in the target export markets (Piercy et al., 1998; Morgan et al., 2004). Competitive advantage is direct antecedents of export performance

because, through their offerings, firms are able to create more value for customers in comparison to their rivals in terms of lower cost structure, superior product, and emphasis on customer service (Piercy et al., 1998; Morgan et al., 2004). Export performance is driven by the existence of export competitive advantage. It is in line with the central theme of the RBV, which states that superior performance accrues with the attainment of competitive advantage (Barney, 1991; Collis and Montgomery, 1998; Fahy and Smithee, 1999; Peteraf and Barney, 2003; Newbert, 2007; Becerra, 2009). Empirically, Morgan et al. (2004) and Murray et al. (2011) reported a strong positive relationship between export competitive advantage and export performance. Thus, the relative superiority of firms' value offerings to target export customers affects export performance. Based on the above discussion, it is hypothesised that:

Hypothesis 10: There will be a positive relationship between export competitive advantage and export performance.

3.3. Chapter Summary

This chapter has presented a conceptual framework of export marketing resources and their performance implications. A number of hypotheses were generated on the basis of the literature review, presented in the previous chapter. Table 3.1 summarises all the research hypotheses to be tested in this study.

Table 3.1: A Summary of Research Hypotheses

	Hypotheses
H1	There will be a positive relationship between tangible export market-based assets and export competitive advantage.
H2	There will be a positive relationship between relational export market-based assets and export competitive advantage.
H3	There will be a positive relationship between intellectual export market-based assets and export competitive advantage.
H4	There will be a positive relationship between export market-based capabilities and export competitive advantage.
H5	There will be a positive relationship between tangible export market-based assets and export market-base capabilities.
H6	There will be a positive relationship between relational export market-based assets and export market-based capabilities.
H7	There will be a positive relationship between intellectual export market-based assets and export market-based capabilities.
H8	The effect of tangible export market-based assets on export market-based capabilities is higher for export firms that have high relational export market-based assets than for export firms that have low relational export market-based assets.
H9	The effect of tangible export market-based assets on export market-based capabilities is higher for export firms that have high intellectual export market-based assets than for export firms that have low intellectual export market-based assets.
H10	There will be a positive relationship between export competitive advantage and export performance.

CHAPTER 4: RESEARCH METHODOLOGY

This chapter describes the research methodology of the study. The research techniques, data collection method, sampling process, questionnaire development, and data analysis technique are outlined. Figure 4.1 shows the road map of the chapter.

Figure 4.1: Outline of Thesis Structure

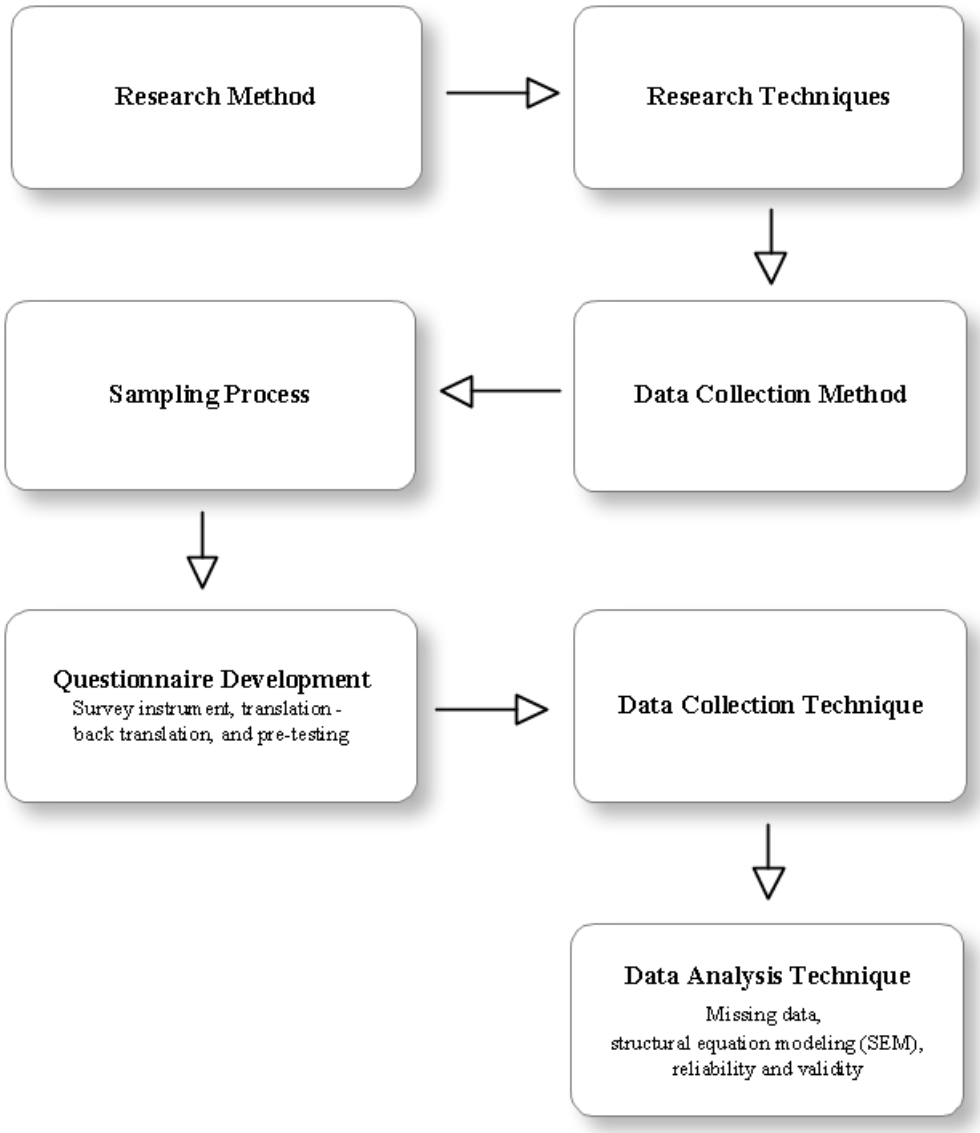

4.1. Research Method

Research method can be classified in various ways. One of the most common distinctions is between qualitative and quantitative research approaches (Malhotra and Birks, 2007; Saunders et al., 2009).

Qualitative method is defined as a strictly inductive method, where the primary advantage lies in obtaining a deeper and richer understanding of phenomenon (Yin, 2003; Zikmund et al., 2010). In the qualitative method, the subjective motives and intentions of participants are commonly used to describe the human actions, and the focal point of researchers is to understand the meaning derived from the information (Saunders et al., 2009). The central goal of the qualitative method is to attempt to observe and understand situations as they are seen by the individuals being studied (Yin, 2003). Since qualitative method requires an unstructured approach of inquiry, it is often appreciated for its flexibility and contribution in providing new perspectives and insights (Yin, 2003; Saunders et al., 2009). Generally, this method is best suited for problems where the findings will increase understanding, expand knowledge, clarify existing issues, and provide input for the future stage of research or development (Luck and Rubin, 1987).

On the other hand, quantitative research is defined as research aiming at reducing ambiguity through transforming perceptions into pre-structured, quantifiable statistical categories and other means of quantification (Alvesson and Deetz, 2000; Saunders et al., 2009). The emphasis of the quantitative method is on facts and causes of certain behaviours, with information in the form of numbers that can be quantified, and summarised using a mathematical process for analysing the numerical data and

expressing the final results in statistical terminology (Zikmund et al., 2010). Quantitative method relies on deductive logic, where theory expressed in detailed hypotheses is to be developed before empirical observation. The gathered data is used to test the theory in order to confirm or reject the proposed hypotheses (Creswell, 1994; Zikmund et al., 2010). According to Hart (1987), it is suggested that the quantitative method is appropriate for (1) testing hypotheses, (2) synthesising a large number of variables to determine associations and the strength of associations, and (3) controlling for generalisability. The adoption of quantitative approach requires a clear understanding of the type of evidence required, and how to collect and analyse that evidence within a well-defined theoretical framework (Saunders et al., 2009).

A quantitative, positivistic approach is concerned with positive facts, and it is based on three principles: (1) finding facts, (2) documenting facts, and (3) using scientific methods (Wicks and Freeman, 1998). The key advantage of the scientific method is that it allows researchers to test their hypotheses and rely on objective measures to support their findings. Such approach avoids speculation and bias (Wicks and Freeman, 1998; Saunders et al., 2009). A quantitative, positivistic approach believes that reality can be observed and described using an objective method, rather than being inferred subjectively through sensation, reflection, or intuition (Levin, 1988). In addition, through the use of a quantitative, scientific method, data generated can be replicated for verification purpose in future studies (Saunders et al., 2009).

There is a tendency among researchers to perceive both qualitative and quantitative research as the ideal ends of a continuum along which actual research is taking place (McKereghan, 1998). Some researchers believe that qualitative and quantitative

methodologies cannot be combined because the assumptions underlying each tradition are different (e.g., Strauss and Corbin, 1990). Others believe that both research methods can be effectively joined in the same research (e.g., Patton, 1990). The use of both qualitative and quantitative methods is called triangulation. Triangulation is defined as a research technique wherein multiple methods are used to analyse the same theoretical question (Lyon et al., 2000). The main advantage of triangulation as a research approach is to increase the research credibility by using different data sources that involve time, space, and persons in order to verify or falsify generalisable trends detected in each data set (data triangulation), by using two or more researchers with different backgrounds (investigator triangulation), and by using different perspectives to interpret data (methodological triangulation) (Patton, 1990; Oppermannt, 2000). Triangulation also reduces the risk of systematic distortions inherent to the use of only one single method (Maxwell, 1998). However, the idea of using different research instruments to produce results has been criticised by some researchers. Fielding and Fielding (1986, p. 33) argued that "theoretical triangulation does not necessarily reduce bias, nor does methodological triangulation necessarily increase validity. Theories are generally the product of quite different traditions, so when they are combined, one might get a fuller picture, but not a more objective one. We should combine theories and methods carefully and purposefully with the intention of adding breadth and depth to our analysis, but not for the purpose of pursuing objective truth".

From the above discussion, there is absolutely no one-fits-all approach to research. Researchers' ultimate goal is to achieve their research objective. As a consequence, they choose the method that best facilitates the accomplishment of that ultimate target.

It essentially depends on specific phenomenon being researched as well as the context of the research. Saunders et al. (2009) pointed out that the nature and the content of individual research problems play a key role in the selection of the research method. The present study favours the quantitative method rather than the others due to the following reasons: (1) the research intends to focus on facts/behaviours rather than on meanings, (2) the research tends to verify theories supported by solid confirmatory evidence, and (3) the research intends to formulate hypotheses in order to ensure existing theories. Thus, the study follows the quantitative method in positivist paradigm and uses a hypothetico-deductive methodology, which hypothesises a law and deduces what kind of observations will demonstrate the truth or falsify it (Easterby-Smith et al., 1991).

The positivistic paradigm seeks to deduce or identify a testable hypothesis regarding the relationship between variables from a theory, which is then tested empirically by gathering data on relevant variables and then applying statistical tests to the data in order to identify significant relationships. The findings may either confirm the theory or result in the modification of the theory in light of the findings (Malhotra and Birks, 2007; Saunders et al., 2009).

4.2. Research Techniques

Although there are several research approaches that can be adopted for collecting data, building theories, and testing hypotheses, Kinnear and Taylor (1991) stated that there is no one standard or idealised research technique to guide all studies because none is the best in all situations, and it is impossible to indicate which method is superior in absolute terms. As such, the best method for any research has to be a trade-off

between the research objectives, the nature of the information required, and the resources available.

For the present study, the survey research is suitable for the research question and objectives. Survey research is the best known and most widely used research technique of collecting primary data in the marketing field (Saunders and Lee, 2005). It is the method of gathering information from a number of individuals in order to learn something about a larger population from which the sample of respondents has been drawn (Dillman, 1987). The results are then used to describe phenomenon about the population (Hair et al., 2010). Information obtained in sample survey research, even subjective measures of firm performance, is often very accurate because the instrument is specifically designed to address the research question (Dess and Robinson, 1984; Slater, 1995). Slater (1995) believed that that survey research can sometimes be the only data collection method for researching marketing strategy questions, and the validity of survey research, when complex organisational variables are involved, has been largely accepted in the marketing and organisational sciences.

One of the issues associated with survey research is the choice between cross-sectional and longitudinal study. Cross-sectional study usually involves the collection of data from any given sample of population at a particular point in time, while longitudinal study focuses on a small number of cases over a long period of time (Zikmund et al., 2010). Cross-sectional survey seems to be suitable for the doctoral research because it is not only cheaper and less time consuming, but also far more common in the marketing literature (Rindfleisch et al., 2008; Saunders et al., 2009).

4.3. Data Collection Method

One of the important concerns in research methodology is the selection of the most appropriate data collection procedures. The study explores six possible data collection methods, which are generally implemented in the marketing and management research. These methods include personal survey, drop-and-collect survey, fax survey, e-mail survey, web-based survey, and mail survey. Each method has its own strengths and weaknesses, which must be considered when making the decision.

(1) Personal Survey

Personal survey or face-to-face survey is suitable when researchers need to show materials to the respondents, or when the respondents require some explanations about the content of the questionnaire or technical terms (Kalof et al., 2008). Although personal survey produces higher response rates than mail survey, it is more costly, time-consuming, and laborious (Malhotra and Birks, 2007). In addition, this method is highly dependent on the skill and knowledge of the interviewer; however, interviewer bias may often occur (Zikmund et al., 2010). Above all, personal survey is considered an inappropriate method for this study because sensitive and relatively confidential data, such as measures of export performance, are asked. A lack of anonymity and confidentiality may lead to obtaining unreliable and invalid information (Malhotra and Birks, 2007).

(2) Fax Survey

Nebenzahl and Jaffe (1995) found that fax survey generates similar response rate as does mail survey, but it has faster response time and lower total cost. In spite of this

advantage, fax survey is considered inappropriate for this study for several reasons. First, survey samples drawn from those who have universal ownership of fax machines may not be a good representative of the population. Second, sampling problems may occur if fax numbers are not readily available (Zikmund and Babin, 2007). Third, the failure, delay, or line engagement may occur during the processes of transmitting or receiving the questionnaire via the facsimile system. Third, this method cannot guarantee anonymity because the identity of the respondents will be automatically revealed to the sender by the fax machine if they return the questionnaires. Finally, this method is not suitable as the survey enquires about financially sensitive information (Jobber and O'Reilly, 1998; Saunders et al., 2009).

(3) Drop-and-Collect Survey

Drop-and-Collect survey or drop-off survey allows researchers to personally deliver and subsequently collect the questionnaire, either directly to and from the target respondent or indirectly through a gatekeeper (Saunders et al., 2009). Drop-and-collect survey has some similar drawbacks to personal survey. First, it is time-consuming and costly. Second, the respondents are usually spread apart across large geographical regions; therefore, it may not be possible to personally drop and collect the questionnaires from every respondent. Finally, the respondent will be identified when the questionnaire is collected (Malhotra and Birks, 2007). As a result, it is inadvisable to employ this method in the study.

(4) E-Mail Survey

With the increasing growth of the Internet and e-mail users, it is important for researchers to examine whether e-mail survey is a more effective method for primary data collection when compared to other traditional methods such as mail survey. Tse (1998) found that e-mail survey provides faster return than mail survey, at lower total cost. Its features of instantaneous transmission and immediate response seem to be superior to other methods. With respect to response rate, evidence shows conflicting results (Zikmund and Babin, 2007). Some researchers obtained comparable or even higher response rates by using e-mail survey (Parker, 1992; Walsh et al., 1992). On the other hand, more recent researchers found response rates form e-mail survey to be relatively lower than mail survey (Bachmann et al., 2000).

While e-mail survey is attractive, users of this means of data collection must be aware of its disadvantages. First, sampling problems may occur because e-mail survey is limited to subscribers who have e-mail account ownership to receive and respond to the survey (Kalof et al., 2008). Second, since the number of junk e-mails received per day has increased with time, e-mail survey may be perceived as annoying junk e-mails (Zikmund et al., 2010). Third, acquiring personal e-mail addresses of target respondents is an expensive endeavour (Malhotra and Birks, 2007). Also, once the e-mail addresses become available, preserving anonymity appears difficult when they reply by e-mail (Malhotra and Birks, 2007).

(5) Web-Based Survey

As incrementally developed, web-based survey method overcomes the shortcomings of e-mail survey. While time and effort are invested in designing a web-based survey with the questionnaire on the webpage, it offers researchers numerous values. Apart from such benefits as low cost, speed, convenience, and international reach, web-based survey also helps reduce concerns regarding anonymity (Grandcolas et al., 2003). Furthermore, the novelty of this more advanced data collection method may encourage higher participation. The finding by Griffis et al. (2003) showed that response rate is higher for web-based survey than mail survey.

However, the web-based survey is not popular in some countries, especially in developing countries. One of the possible reasons may relate to technological failure caused by situations such as problems with the servers or the computers themselves, which would clearly result in a poor response rate, thus naturally favouring the traditional mail survey over technology based survey (Kalof et al., 2008). When the Internet becomes increasingly accessible to a greater segment of the population, and reliable e-mail addresses are available, sampling will become less restrictive, thereby attracting researchers to adopt this effective method. Nevertheless, based on the current viewpoints, it is inappropriate to adopt this method for the study.

(6) Mail Survey

A mail survey or postal survey is conducted by sending a set of self-administered questionnaires to each target respondent through postal service. In principle, the mail survey does not allow researchers to have personal interaction with the respondents

during the period of data collection. However, in some cases, a telephone call or personal contact is made to ask for participation from the target respondents before the questionnaire is mailed (Stevens et al., 1997).

Compared to other methods, the weakness of mail survey is generally recognised to be a low response rate (Rindfleisch et al., 2008). Another drawback is that there is no opportunity for clarifying some ambiguous answers of the respondents, so the answers have to be accepted as final (Zikmund and Babin, 2007). However, mail survey is most broadly used as the primary data collection method across many disciplines, such as marketing and management (Malhotra and Birks, 2007; Zikmund et al., 2010). First, it is the most effective, least time-consuming, and least costly means to collect data from geographically dispersed populations (Kalof et al., 2008). With the benefit of wider distribution, the mail survey is an important method of gathering cross-national research data (Jobber et al., 1991; Zikmund and Babin, 2007). Second, when encountered with the difficulty to reach respondents, especially top executives, mail survey may be conducted with relative ease; it allows respondents to check information by verifying their records or documents, consulting other colleagues of the company, and permitting them to reply thoughtfully in their own time (Dillman, 2000). Finally, the lack of interviewer – interviewee interaction can give the feeling of anonymity, which can encourage more accurate response to relatively sensitive questions when compared to other methods (Malhotra and Birks, 2007). Due to its superiority over the other five methods, the mail survey is thereby selected for this study.

4.4. Sampling Process

The use of a sample to obtain precise information about a population is a very efficient technique, which has been extensively used in the literature (Hair et al., 2010). In spite of taking less time and providing cost savings when compared to a complete census, sampling enables researchers to draw general conclusions about the whole population. In this section, the sampling process is presented as a series of procedures, which includes establishing the research setting, identifying the sampling frame, selecting the sampling method, determining the sample size, and identifying target respondents (Churchill, 1995).

(1) Research Setting

Thailand is selected for the present study because its economy relies largely on exports. According to the World Development Indicators database, September 2009, Thailand is one of Asia's most export-oriented countries, where exports accounted for around 70 percent of GDP (www.worldbank.org/data/). More specifically, manufacturing exports have played an important role in Thailand's economic success. Thailand's industrial structure has undergone significant changes and has now become primarily export oriented (Phan, 2004). Thailand has enjoyed decades of robust, and sustainable, economic expansion by successful forays of Thai goods into the international markets. The share of manufacturing exports in GDP increased from just 7% in 1980 to around 40% in 2007 (Dhannani and Scholtes, 2002; Asian Development Bank, 2009). In addition, the growth of manufacturing exports is not only confined to two or three manufacturing products, but spread over a wide cross-section of the manufacturing sector (Phan, 2004). Thus, understanding the role of

export marketing resources in manufacturing export firms in Thailand is useful for export marketing and export performance research.

(2) Sampling Frame

After identifying the research setting, the next step is to select the sampling frame. The sampling frame of manufacturing export firms used for the study is based on the 2008 Thailand Exporter Directory, which contains a list of approximately 10,000 firms. This is a reliable and legitimate source because it was developed by the Department of Export Promotion, Ministry of Commerce, which oversees and supports exporters in Thailand. Thus, it should provide the most complete set of manufacturing export firms in Thailand.

(3) Sampling Method

A critical decision involving the sample is how the sample units are to be selected. This decision requires the selection of a sampling method (Hair et al., 2010). Sampling methods can be divided into two broad categories of probability and nonprobability sampling. The probability sample seems to be the preference of a majority of researchers, enabling them to capture the characteristics of the population in the sample through the element of chance (Tabachnick and Fidell, 2007; Hair et al., 2010). Through systematic random sampling, every fifth name was selected. Thus, the sample units are 2,000 manufacturing export firms.

(4) Sample Size

Within a quantitative survey design, determining the size is essential (Bartlett et al., 2001; Hair et al., 2010). In the study, the sample size is determined on the basis of the following considerations.

Sample size can be assessed by considering the trade off between significant level and statistical power (Churchill, 1995; Hair et al., 2010). Cohen (1988) provided a guideline for the size of sample to achieve alpha levels of at least .05 with power levels of 80 percent. To achieve this level, all three factors must be considered simultaneously (effect of size, alpha, and sample size). With an alpha level of .05, a power of 80%, research requires a sample size of 130 (Cohen, 1988). Other scholars recommend determining the sample size by analytical techniques, especially in multivariate data analysis. Bartlett et al. (2001) pointed out that if researchers plan to use factor analysis, the sample size should not be less than 100 to obtain valid results. In the case of structural equation modeling (SEM), a number of statisticians assert that a sample size from 100 to 200 is often recommended (Hair et al., 2010; Bagozzi and Yi, 2012). Thus, when structural equation modelling is used for data analysis in the study, the sample size of 200 would meet the criteria.

(5) Target Respondent

According to the conceptual framework from the previous chapter, information is required from respondents with knowledge of corporate philosophy, export marketing superiority, and export performance. Huber and Power (1985) indicated that the responses from the most knowledgeable informant can be more accurate than taking

average responses from multi-informants with a range of knowledge. Bowman and Ambrosini (1997) reviewed the empirical survey studies published in the Strategic Management Journal, and found that a majority of the studies used single respondents to make inferences of the organisation. Gatignon et al. (2002) argued that using a single knowledgeable informant is a valid approach to measuring strategy research questions and that bias introduced by such an informant is likely to be negligible compared to multiple informant responses. Kahn (2001) noted that respondents from different functions may provide conflicting results. Thus, the single key-informant approach appears more attractive, and the study relies on a single well-informed respondent from each firm (e.g., Piercy et al., 1998; Morgan et al., 2004; Lings and Greenley, 2005; Hooley and Greenley, 2005; Cadogan et al., 2006; Leonidou and Katsikeas, 2010).

The quality of response is usually obtained from informants whose roles are closely related to the phenomena under study (Kumar et al., 1993). It is generally accepted that the responses derived from a chief executive officer (CEO), a key member of the firm, can reflect the actual organisational characteristics most accurately. Cycyota and Harrison (2002) stated that CEOs may be the only reliable source of certain information about aspects of the firm as a whole. Zahra and Covin (1993) noted that the CEOs provide data as reliable and valid as multiple informants. The use of CEOs in organisational research is widespread, since firms are ultimately a reflection of their top management (Hambrick and Mason, 1984). Based on this view, CEOs are undoubtedly chosen for specific reasons. CEOs are supposed to be knowledgeable about the issues being researched. In relation to export performance, they tend to have the highest familiarity with this information, and in some non-large firms, much of

this information is limited to top management (Pelham, 1997). Moreover, not all firms have a formal marketing department. Therefore, the means of collecting data from CEOs rather than from marketing managers seems to be the most efficient and effective method for the present study. Nevertheless, it is likely that the CEOs may assign another key member of the firm such as managing director (MD), general manager (GM), or senior-level manager to take part in the survey instead. In some cases, MD or GM may be the highest management position in the company. A number of previous studies have considered this issue as an unavoidable limitation, thus response from senior-level managers was still acceptable (Venkatraman and Ramanujam, 1987; Kotabe and Czinkota, 1992; Leonidou and Katsikeas, 2010).

4.5. Questionnaire Development

High quality data will be obtained from respondents only when an effective survey instrument is constructed. The questions must be briefly stated and easily understood to capture the attention and interest of potential respondents.

4.5.1 Survey Instrument

The study relies on previously validated scales, which were initially published in leading journals. All measures have an acceptable Cronbach Alpha and provide strong evidence of reliability and validity. The type of survey questionnaire used in the study is described as a fully structured design with close-end questions. The survey instrument has eight sections. Section one focuses on the profile of key informant and firm characteristics. Section two – section six deal with the firm's export marketing

resources, including tangible export market-based assets, relational export market-based assets, intellectual export market-based assets (external market orientation), intellectual export market-based assets (internal market orientation), and export market-based capabilities. Section seven addresses the firm's export competitive advantage. Finally, section eight addresses the firm's export performance.

Scales used to measure the theoretical constructs are multi-items with a seven point Likert scale. All measures are conducted with anchors 1 = much worse and 7 = much better, or 1 = strongly disagree and 7 = strongly agree. All constructs in the study are deemed reflective since the items reflect the meanings of the constructs (Kline, 2010). The study uses reflective indicators to estimate the model, rather than formative indicators. It is assumed that the latent variable causes the observed items, instead of the items causing the latent variable. It is challenging to decide whether to specify the observed items as reflective or formative indicators of the latent constructs (Jarvis et al., 2003). With formative models, it is necessary to include all relevant concepts that form the construct, because dropping an indicator may alter the meaning of the construct. On the other hand, with reflective models, the meaning generally does not alter when dropping an item (Jarvis et al., 2003; Kline, 2010). The reasons for choosing reflective over formative models are based on the following criteria (Jarvis et al. 2003): the relative homogeneity and interchangeability of items pertaining to a latent construct, the high degree of covariation among items, and the expectation that the items are likely to be affected by the same antecedents and have the same consequences. Modeling indicators in a reflective way rests on the domain sampling model of classical test theory: indicators are interchangeable (Kline, 2010). The reflective indicators capture the same construct of interest and are highly correlated

with each other, so these make the traditional assessment of unidimensionality, reliability and validity all meaningful (Chin, 1998).

Each theoretical construct is considered as representing a second-order factor. In a second-order model, the observed items load on first-order factors, and first-order factors load on second-order factors. So, first-order factors account for correlations between items, and second-order factors account for the communality among latent first-order factors (Byrne, 2010; Kline, 2010). These second-order constructs represent common themes shared by a number of first-order latent variables (Bollen, 1989). The motivation behind this approach is to form the theory-based constructs to represent the complex nature of a firm's assets, capabilities, competitive advantage, and performance, and to provide the opportunity to test the complex relationships between these theoretical constructs (cf. Morgan et al., 2004).

The Questionnaire

The questionnaire contains questions about the respondents' and firms' demographics as well as questions to measure the research constructs. The questionnaire consists of eight sections (See Appendix A).

Section 1: General Information

The first section of the questionnaire contains eight questions, which are designed to obtain demographic profiles of the respondents and their firm characteristics: position, work experience, type of industry, number of employees, year of establishment, export experience, average ratio of export to local sale, and export markets.

Section 2: Tangible Export Market-Based Assets

Tangible export market-based assets refer to the extent to which an export firm has developed scale of operation, financial, and physical assets. The scale items draw from the work of Piercy et al. (1998) and Morgan et al. (2004) and use a seven point scale (1=much worse; 7=much better).

	TANGIBLE EXPORT MARKET-BASED ASSETS (TA)
	Scale of Operation (SCL)
TA1	Number of full-time employees.
TA2	Percentage of employees mainly involved in the export function.
TA3	Annual turnover.
	Financial Assets (FIN)
TA4	Availability of financial resources to be devoted to export activities.
TA5	Availability of financial resources to be devoted to the firm.
	Physical Assets (PHY)
TA6	Use of modern technology and equipment.
TA7	Preferential access to valuable sources of supply.
TA8	Production capacity availability.

Section 3: Relational Export Market-Based Assets

Relational export market-based assets refer to the extent to which an export firm has developed supply chain and strategic alliance assets. The scale items draw from the work of Greenley et al. (2005) and Hooley and Greenley (2005) and use seven point scale (1=much worse; 7=much better).

	RELATIONAL EXPORT MARKET-BASED ASSETS (RA)
	Supply Chain Assets (SPC)
RA1	Extent or nature of the distribution network.
RA2	Relationships with suppliers.
RA3	The uniqueness of our distribution approach.
RA4	Relationships with distribution channel intermediaries.
	Strategic Alliance Assets (STA)
RA5	Market access through strategic alliances or partnerships.
RA6	Shared technology through strategic alliances or partnerships.
RA7	Access to strategic partners' managerial know-how and expertise.
RA8	Access to strategic partners' financial resources.

Section 4 and Section 5: Intellectual Export Market-Based Assets

Intellectual export market-based assets refer to the extent to which an export firm has developed external and internal market orientation. The scale items of external market orientation draw from the work of Cadogan et al. (2003) and Cadogan et al. (2004). The scale items of internal market orientation draw from the work of Ling and Greenley (2005). They use seven point scale (1= strongly disagree; 7= strongly agree).

	INTELLECTUAL EXPORT MARKET-BASED ASSETS (IA)
	External Market Orientation (EMO)
IA1	In this company, we generate a lot of information concerning trends (e.g., regulations, technological developments, political, economic) in our export market.
IA2	We constantly monitor our level of commitment and orientation to serving export customer needs.
IA3	We periodically review the likely effect of changes in our export environment (e.g., regulation, technology).
IA4	We generate a lot of information in order to understand the forces which influence our overseas customers' needs and preferences.
IA5	Too much information concerning our export competitors is discarded before it reaches decision makers. (R)
IA6	Information which can influence the way we serve our export customers takes forever to reach export personnel. (R)
IA7	Important information about our export customers is often 'lost in the system'. (R)
IA8	Information about our export competitors' activities often reaches relevant personnel too late to be of any use. (R)
IA9	Important information concerning export market trends (regulation, technology) is often discarded as it makes its way along the communication chain. (R)
IA10	If a major competitor were to launch an intensive campaign targeted at our foreign customers, we would implement a response immediately.
IA11	We are quick to respond to significant change in our competitors' price structures in foreign markets.
IA12	We are quick to respond to important changes in our export business environment (e.g., regulation, technology, economy).
IA13	We rapidly respond to competitive actions that threaten us in our export markets.
	Internal Market Orientation (IMO)
IA14	Management tries to find out what employees want from the company
IA15	If management notices one of our employees is acting differently to normal, they will try to find out if there is a problem that is causing a change in behaviour.
IA16	Management tries to find out our employees' real feelings about their jobs.
IA17	Management regularly talks to our staff to find out about their work.
IA18	We have regular staff appraisals in which we discuss what employees want.
IA19	Management meets with our employees at least once a year to find out what expectations they have of their jobs for the future.
IA20	Management interacts directly with our employees to find out how to make them more satisfied.
IA21	We do a lot of internal marketing research e.g., job satisfaction, work motivation.
IA22	We survey our staff at least once a year to get information about their attitudes to their work.
IA23	We survey our employees at least once a year to assess the quality of employment.
IA24	We often talk with our survey people to identify influences on our employees' behaviour (e.g., unions, sales representatives, customers).

IA25	We have regular staff meetings with employees at all levels attending.
IA26	Management regularly reports back to our staff about issues that affect their working environment.
IA27	Management regularly meets with all my staff to report about issues relating to the whole organisation.
IA28	When we find out that employees are unhappy with our supervision or management, we take corrective action.
IA29	When we find that employees would like us to modify their condition of employment, the departments make concerted efforts to do so.
IA30	We make changes to what we do when employee feedback indicates that they are dissatisfied with the status quo.

Note: R = Reverse scale

Section 6: Export Market-Based Assets Capabilities

Export market-based capabilities refer to the extent to which an export firm has developed informational, relationship building, and product development capabilities. The scale items draw from the work of Morgan et al. (2004) and use seven point scale is (1=much worse; 7=much better).

	EXPORT MARKET-BASED CAPABILITIES (MC)
	Informational Capabilities (INF)
MC1	Identification of prospective customers.
MC2	Capturing important market information.
MC3	Acquiring export market-related information.
MC4	Making contacts in the export markets.
MC5	Monitoring competitive products in the export markets.
	Relationship Building Capabilities (REL)
MC6	Understanding overseas customer requirements.
MC7	Establishing and maintaining close supplier relationships.
MC8	Establishing and maintaining close overseas distributor relationships.
	Product Development Capabilities (PRD)
MC9	Development of new products for our export customers.
MC10	Building of the product to designated or revised specifications.
MC11	Adoption of new methods and ideas in the manufacturing process.

Section 7: Export Competitive Advantage

Export competitive advantage refers to the extent to which an export firm has gained cost, product, and service advantage. The scale items of external market orientation draw from the work of Piercy et al. (1998) and Morgan et al. (2004) and use seven point scale (1=much worse; 7=much better).

EXPORT COMPETITIVE ADVANTAGE (CA)

Cost Advantage (COS)

CA1 Cost of raw materials.
CA2 Production cost per unit.
CA3 Cost of goods sold.
CA4 Selling price to end-user abroad.

Product Advantage (PRO)

CA5 Product quality.
CA6 Packaging.
CA7 Design and Style.
CA8 Brand image abroad.

Service Advantage (SER)

CA9 Product accessibility.
CA10 Technical support/after sales service.
CA11 Delivery speed and reliability.
CA12 Product line breadth.

Section 8: Export Performance

Export performance refers to the extent to which an export firm has achieved economic, distributor, and end-user performance. The scale items of external market orientation draw from the work of Morgan et al. (2004) and use seven point scale (1=much worse; 7=much better).

EXPORT PERFORMANCE (EP)

Economic Performance (ECO)

EP1 Export sales volume.
EP2 Export market share.
EP3 Profitability.
EP4 Percentage of sales revenue derived from products introduced in export markets during the past three years.

Distributor Performance (DIS)

EP5 Service quality to distributors.
EP6 Quality of your company's relationship with distributors.
EP7 Reputation of your company to distributors.
EP8 Distributor loyalty to your company.
EP9 Overall satisfaction with your total product/service offering to distributors.

End-User Performance (END)

EP10 Quality of your company's end-user customer relationships.
EP11 Reputation of your company to end-user.
EP12 End-user customer loyalty to your firm.
EP13 End-user customer satisfaction.

4.5.2 Translation – Back Translation

It has been suggested by numerous researchers that in the context of a cross-cultural study conducted either in more than two cultures, or one culture but using the questionnaire developed in another culture, researchers need to implement the translation – back translation method (Brislin, 1980; Douglas and Craig, 2007). In the study, the questionnaire was initially designed in English. Since English is not an official language in Thailand, it is likely that some of the potential respondents might not participate in the survey as a consequence of their unfamiliarity with the English language. Douglas and Craig (2007) proposed that the questionnaire should be translated into a local language to avoid misinterpretation and misunderstanding. In this procedure, a bilingual native of the target country translates the questionnaire into the local language. The original and back-translated versions are then compared for differences and comparability. The accuracy of the back-translated version is considered as the indicator of the accuracy of the target translation.

The selection of questionnaire translators for academic research is an important issue. In the study, the qualifications of the translators are based on two criteria. First, they must not only have good command of both English and Thai languages, but they also need to be capable of producing the Thai version of questionnaire in an academic style of writing. Second, the translators should have sufficient knowledge of marketing terminology. They must hold either a Master degree from a foreign business school or have over five years experience in conducting academic research in Thailand. Therefore, two qualified native translators were involved in this study (Brislin, 1980).

Subsequently, two versions of the questionnaire from these translators were compared to examine whether there were any differences in terms of functional and linguistic equivalents. After inspecting and editing the translated version of the questionnaire, the amended Thai version was back-translated into English by two native Thai speakers with similar qualifications to ensure that the original meanings and the essence of the questionnaire were not lost, distorted, or diluted through translators (Douglas and Craig, 2007).

4.5.3 Pre-Testing

Pre-testing is the preliminary use of a questionnaire in a small pilot study to ascertain the quality of the survey instrument before it is used in a large-scale survey. In the study, the questionnaire is pre-tested with top executives from Thai manufacturing exporters.

The majority of scholars suggested that the pre-test should be conducted via personal interviews because they enable researchers to notice the respondents' reactions and hesitations, which could not be obtained through other methods (Malhotra and Birks, 2007; Zikmund et al., 2010). Burns and Bush (1998) suggested that a pre-test of five to ten representative respondents is usually sufficient to identify problems with a questionnaire. As a result, ten top executives from the Thai manufacturing export industry were approached to review the questionnaire in order to identify which questions are difficult to answer, which ones are ambiguous, which terms can be misinterpreted, and which sections are too long. After obtaining their feedback, some

changes were made to suit the respondents. The final version of the questionnaire is presented in Appendix B.

4.6 Data Collection Technique

Researchers seek effective, low cost means of collecting high quality data. This quality of survey is achievable when researchers can procure techniques that can increase mail survey response rates, reduce item omission, and speed up responses. Fundamentally, three critical issues that affect the overall quality of survey have been investigated: response rate, response completeness, and response speed (Cavusgil and Elvery-Kirk, 1998; Zikmund et al., 2010).

Response rate of a survey is defined as the total number of completed questionnaires returned, divided by the net mailing sent, where the net mailing is calculated by deducting the undelivered questionnaires returned by the post office, from total mailing. Response completeness is measured as the proportion of the unanswered questions on a returned questionnaire, whereas response speed is determined by the number of days between the date of mailing the questionnaire to the respondent and the date of its return to the researchers (Cavusgil and Elvery-Kirk, 1998; Zikmund et al., 2010).

A prevailing assumption in survey research is that a high quality survey can provide a useful and accurate basis to help researchers with further data analysis (Bright and Smith, 2002). However, given the budget and time constraints for the doctoral research, it is essential to consider whether the benefits of marginal increases in the

quality of survey outweigh the costs incurred. Therefore, this study adopts a number of cost-effective techniques in order to obtain surveys of quality as high as possible, at a reasonable survey cost. The techniques designed to improve survey quality are demonstrated below.

(1) Pre-Notification Contact

The purpose of pre-notification contact is to gain commitment from target respondents prior to the delivery of the actual questionnaires. Some researchers believe that recipients are more willing to complete the questionnaire if they receive advance notification by either mail or telephone (Cavusgil and Elvery-Kirk, 1998).

However, some empirical evidence illustrated that a preliminary contact has little or no effect on return rates (Fox et al., 1998). Greer et al. (2000) noted that pre-contact may be an appropriate technique only for consumer or household survey. In industrial survey, business people seem to work under more rigid time constraints. More importantly, the cost and effort to mail a pre-notification letter or to call each firm are exceptionally high. Dennis (2003) noted that pre-notification contact is worth implementing only when the sample size of business organisations is small.

It can be seen that the effectiveness of pre-notification contact in improving response rates appears inconsistent in the literature. Malhotra and Birks (2007) pointed out that the follow-up technique may be a better investment than the pre-notification technique to accelerate the rate of response. Following this suggestion, this study omits the pre-notification technique.

(2) Colour of Questionnaire

It is typically believed that colour can attract recipient's attention to complete the questionnaire. However, previous studies have not found an increase in response rate with the use of colour in questionnaire design (Dennis, 2003; Newby et al., 2003), except the study of LaGarce and Kuhn (1995), who found colour to be a significant value for increasing mail survey response rates. Since the colour questionnaires are costly, this study uses a black and white questionnaire instead.

(3) Cover Letter

Cover letter proves to be one of the few direct opportunities for influencing respondents and motivating recipients to reply (Zikmund et al., 2010). Fox et al. (1988) noted that cover letter used for the original mailing is probably the most important single factor influencing a high rate of response. Thus, care was taken to compose the cover letter for this research survey. The cover letter encompasses a warm, recipient-friendly, and appreciative language. It begins with clear research objectives and potential benefits of collecting the data. It also explains the importance of completing the questionnaire by emphasising the limited sample size and selectivity of the sample. Moreover, the cover letter points out that all data will be held confidential. The respondent's identity will not be related to their answers and the data will be presented in aggregate form only. Highlighting the direct benefits of the response to the participants is also included. At the end of the cover letter, the researcher's name, his supervisors' name and title, and contact details are provided as well, as suggested by Dillman (2000).

(4) Monetary Incentive

Monetary incentive technique has long been implemented in mail surveys to enhance the rate of response. A considerable number of researchers, based on a meta-analysis research by Fox et al. (1988), asserted that a monetary incentive, even a small amount of money enclosed with the questionnaire, increases the response rate. The possible reason is that the enclosed money establishes a trust necessary for the social exchange between sender and recipient (Dillman, 1987). Cavusgil and Elvey-Kirk (1998) also agreed that once the respondents receive monetary incentive, they feel obligated to reciprocate by returning a completed questionnaire. More recently, Jobber et al. (2004) confirmed that the response rate increases as the value of the prepaid monetary incentive increases, in both industrial and consumer populations.

However, Yammarino et al. (1991) argued that the positive effect of monetary incentive on response rate is not always valid in all contexts. James and Bolstein (1990) supported this view by indicating that monetary incentive may be meaningless to serve as a motivating factor. The probable reason is that a single dollar incentive is not large enough to trade with their efforts for questionnaire completion, particularly industrial surveys. Based on this perspective, this study does not employ this technique.

(5) Non-Monetary Incentive

For industrial mail survey, the gatekeeper (usually secretary) may be under instructions to filter out items that may be considered as junk mail. Therefore, the inclusion of a non-monetary incentive may differentiate a mail questionnaire from others. According to Yu and Cooper (1983), non-monetary incentives, such as pens, pencils, books, and summary of survey results, are most commonly used in past studies. Interestingly, Jobber et al. (1991) found that a non-monetary incentive (e.g., bookmark) had a positive effect on response rate as well, whereas the promise of a summary of the study results did not. Kalafatis and Tsoga (1994) also concluded that a summary of results did not significantly enhance the effectiveness of mail responses. Thus, this study does not use non-monetary incentives.

(6) Prepaid Stamp

The inclusion of a stamped, pre-addressed return envelope seems to be a widely accepted practice in mail surveys, accompanying the cover letter and the questionnaire. Certain studies have investigated the relative effectiveness of stamped versus business return envelopes, on response rates. The majority of studies showed a higher rate of return achieved through the stamped reply envelope technique (e.g., Harris and Guffey, 1978). Two possible explanations may justify these results. First, the usage of a stamp represents money, while a business reply envelope does not (Erdos, 1970), which may raise the perceived importance of replying, in the recipient's perspective. Psychologically, the recipients may find it difficult to throw away an unused stamp because of its monetary value. Second, the form of return postage prepaid by the researchers can improve response rate as a result of the

convenience provided to the recipient in returning the completed questionnaire. In contrast, if return postage is not offered with the mailed survey, the potential recipients tend to disregard the questionnaire because they are then required to put in the effort and the money to procure a postage stamp (Cavusgil and Elvey-Kirk, 1998). Consequently, it was worthy providing a stamped reply envelope in each questionnaire pack for this study, although it ensued a higher postage cost.

(7) Day of the Week

The day of the week can be considered as a situational factor regarding when the target respondents receive the questionnaires. Greer et al. (2000) categorised two periods of the week, early week (Monday to Wednesday) and late week (Thursday and Friday). Dennis (2003) suggested that higher response rates could be easily achieved at no extra cost by only adjusting the mail schedule. If the questionnaires arrive on Friday, the potential recipients may be less willing to fill out the questionnaires since the weekend is approaching, and other work may hold higher priority. Alternatively, if the questionnaires reach on Monday with the heaviest mail volume received, the recipients may be less likely to notice and to respond. Another possibility is that if the questionnaires arrive between Tuesday and Thursday, when the mail volume is lighter, it is more likely for respondents to participate in the survey. Therefore, the mailing was undertaken on Monday in order to allow the questionnaires to arrive by Tuesday or Wednesday.

(8) Follow-up

Follow-up has been widely used with great success (Jobber and O'Reilly, 1996; Dillman, 2000). Jobber and O'Reilly (1996) noted that respondents may not respond to a survey initially, but prefer to do so when they receive a reminder. This may be because the recipients realise the importance of the survey from the researchers' effort in spending the time and the money to conduct a follow-up.

There are four types of follow-up techniques: (1) postcard follow-up, (2) second mailing follow-up, (3) telephone follow-up, and (4) multiple follow-up, known as Dillman's (1987) technique, which combines all three together. There is a trade-off between cost incurred and response rate achieved. Although it is more time-consuming and costly, Dillman's follow-up technique is expected to gain better returns than using single mailing strategy (Dillman, 1987; 2000). Thus, this study uses two follow-up techniques, a postcard reminder and a second mailing of the questionnaire.

4.7. Data Analysis Technique

4.7.1 Missing Data

Missing data is one of the pervasive problems in data analysis, and its effects fall on further multivariate data analysis and interpretation of results. For this reason, it should be directly accommodated in the research plan. Missing data refers to a class of problems made difficult by the absence of some portions of a familiar data structure (Little and Rubin, 1987; Schafer and Graham, 2002; Hair et al., 2010). No matter how carefully researchers plan their data collection when using survey methodologies, they often grapple with the problem of how best to handle missing values (Little and Rubin, 1987; Efron, 1994). Missing values may result from lost surveys, respondent's refusal to answer survey questions, skipped questions, illegible responses, procedural mistakes, or other reasons (Buhi et al., 2008). Buhi et al. (2008) suggested that in a circumstance when eligible participants do not take part in the study, the missing data represents survey non-response.

Both practical and substantive considerations necessitate an examination of missing data processes. The practical impact of missing data is the reduction of the sample size available for analysis, whereas from a substantive perspective, any statistical results based on data with a non-random missing data process could be biased. This bias occurs when the missing data process causes certain data to be missing and these missing data lead to erroneous results (Hair et al., 2010). As pointed out by Schafer and Graham (2002) and Buhi et al. (2008), missing values can be classified into three types, including data that are missing at random (MAR), data that are missing completely at random (MCAR), and data that are not missing at random (NMAR).

When data are MAR, incomplete data arise not from the missing values themselves, but rather missingness is a function of some other observed variables for which the study has obtained data (Schafer and Graham, 2002). MAR data are also termed ignorable, because when this pattern occurs, researchers can ignore the reasons for which data are missing and employ a missing data technique to manage the problem (Allison, 2002). On the other hand, MCAR occurs when the probability of missingness is unrelated to both the observed variables (those for which the study has data) and the variables with missing values (those for which the study has no or incomplete data). An example of MCAR data occurs when a participant fails to return a follow-up due to reasons unrelated to the study. Similar to MAR, MCAR data are ignorable, therefore researchers can ignore the reasons for which the data are missing. NMAR data are made missing by systematic influences, and may present complex issues for researchers who decide to use certain missing data techniques, as NMAR is the most problematic pattern of missingness. NMAR as a missing data mechanism means that the probability of missingness is related to the values that are themselves missing (Schafer and Graham, 2002). Different techniques can be used to handle missing data.

Three popular methods of handling missing data are deletion, direct estimation, and imputation (Buhi et al., 2008; Hair et al., 2010). Deletion involves both listwise and pairwise deletion techniques that discard cases during an analysis if they contain missing data. While listwise deletion involves excluding from analysis all cases with missing values for any variable, pairwise deletion uses all available data for each variable to compute means and variances. Deletion methods are easy to employ and do not require a lot of statistical expertise, and thus are frequently used. Direct

estimation approaches such as full information maximum likelihood (FIML) and fully Bayesian analysis use all available information in the data, including the observed values from cases with data on some, but not all, variables to construct parameter estimates and standard errors.

However, several methods for managing missing data fall under the category of imputation, which involves both single and multiple imputations. Imputation refers to a process of replacing the missing values with a substitute that allows data analysis to be conducted without being misleading (Allison, 2002). The substitute values replaced for a case are derived from one or more other cases that have similar response patterns over a set of matching variables (Hair et al., 2010). The basic idea in data imputation procedure is to substitute each missing value with some reasonable guess (imputation) and then proceed to do the analysis as if there were no data missing (Allison, 2002; Hair et al., 2010).

4.7.2 Structural Equation Modeling (SEM)

Structural equation modeling (SEM) is a second generation multivariate technique to estimate simultaneously a series of interrelated dependent relationships (Diamantopoulos, 1994; Diamantopoulos and Siguaw, 2000; Kline, 2010). SEM is superior to the first generation techniques, such as multiple regression in many aspects. First, the coefficient estimates are more valid because SEM explicitly incorporates errors of measurement in its analysis (Schumacker and Lomax, 2004). This represents one of the main advantages of SEM over first generation techniques such as multiple regression in which exogenous variables (independent variables) are measured without error, an assumption which is unlikely to be true in reality

(Tabachnick and Fidell, 2007). Second, SEM enables researchers to specify structural relationships among the latent variables, thus producing more accurate representations (Diamantopoulos and Siguaw, 2000; Raykov and Marcoulides, 2000). Finally, while the first generation techniques are limited to examining a single relationship at a time between independent and dependent variables, SEM can analyse all of the relationships in one procedure and has an ability to measure indirect effects of variables through other (mediating) variables (Hair et al., 2010; Kline, 2010).

There are two types of SEM techniques: partial least squares (PLS) and covariance-based SEM. PLS is designed to explain variance examining the significance of the relationships and their resulting R square. It is primarily intended for causal-predictive analysis in situations of high complexity but low theoretical information (Joreskog and Wold, 1982). Thus, PLS is more suited for predictive or exploratory purpose (Tenenhaus et al., 2005; Kline, 2010). On the other hand, covariance-based SEM technique emphasises the overall fit of the proposed model as opposed to a best possible fit covariance structure providing indices and residuals. Hence, it is best suited for confirmatory research like theory testing and development (Anderson and Gerbing, 1988; Kline, 2010).

Against this background, the study adopts covariance-based SEM as a technique to analyse the data through two-step approach suggested by Anderson and Gerbing (1988). First, SEM is used to perform CFA on all the constructs. This step is known as testing the measurement models. Second, SEM is used to test the proposed research framework exhibited in Chapter Three. This step is associated with testing the structural model. The measurement part describes how the latent variables or constructs are operationalised via the manifest variables whilst the structural part

specifies relationships between the latent variables or constructs themselves. The analysis is confirmatory in nature, and seeks to determine the extent to which the priori structure is consistent with the empirical data (Diamantopoulos 1994; Kline, 2010). A measurement model specifies manifest or indicator variables for exogenous (i.e. independent) and endogenous (i.e. dependent) latent variables or constructs. It is analysed by CFA to assess the reliability of each latent variable or construct to estimate causal relationships (Hair et al., 2010). On the other hand, a structural model is a set of one or more dependent relationships linking the latent constructs and is useful in representing the interrelationships of variables between dependent relationships (Byrne, 2010; Kline, 2010). This type of solution provides two advantages: the test of the theoretical structure of the measurement model or the relationship of constructs with measures, and the test without bias that measurement errors introduce (Schumacker and Lomax, 2004; Kline, 2010).

There are a number of popular software packages available for SEM, such as LISREL (Joreskog and Sorbom, 1989), EQS (Bentler, 1995), AMOS (Arbuckle and Wothke, 1999) and others. The statistical software AMOS version 18 is chosen in the present study for several reasons. First, AMOS has gained popularity in recent years due to its simpler application for users, when compared to LISREL and EQS (Byrne, 2010). Second, AMOS allows users to pick up and produce diagrams of high quality (Arbuckle, 2009). Finally, AMOS can fit multiple models in a single analysis. The program examines every pair of models for which one model can be obtained by replacing restrictions on the parameters of the other. AMOS reports several statistics appropriate for model comparison, such as nested models and multiple-group analyses (Byrne, 2010).

An Overview of Structural Equation Modeling

Structural equation modeling (SEM) is a multivariate statistical technique which contains and combines factor analysis and path analysis (Kline, 2010). The power of SEM technique lies in its ability to combine the measurement and structural parts of the model into one framework. In a regression analysis, the average scores of individual items of a particular construct are used for establishing a relationship between different constructs; it is assumed that all the items of a scale contribute equally to the construct in question. SEM obviates this assumption by explicitly incorporating the role played by individual items in the measurement of the construct (Kline, 2010). There are several advantages of SEM over other multivariate statistical techniques. SEM enables researchers to adopt a more holistic approach and test complex theoretical models. It examines a series of dependent relationships simultaneously, so that one dependent variable may become an independent variable in other dependent relationships. In addition, SEM can control for measurement error in latent variables and also provide greater rigour regarding the test for measurement reliability and validity (Schumacker and Lomax, 2004; Kline, 2010).

SEM is a model-based approach to multivariate data analysis that includes both a measurement model and a structural model (Anderson and Gerbing, 1988). The measurement model specifies relationships between the observed measures and latent variables or constructs. The measurement model contains information in relation to how theoretical constructs are operationalised and measured in the study. Confirmatory factor analysis (CFA) is utilised in the measurement model to establish the loading of each measured variable onto the latent variable and to establish the reliability and validity of the construct (Kline, 2010). On the other hand, the structural

model involves the evaluation of the theoretical relationships between the constructs (Hair et al., 2010). A regression equation in the context of SEM is called a structural equation, and the parameter, a structural parameter (Schumacker and Lomax, 2004). Structural parameters are equivalent to coefficients in a multiple regression model, but they are considered to have more theoretical meaning than ordinary regression weights since they account for the measurement error in the variables. In contrast, ordinary regression coefficients can be affected by the amount of measurement error (Schumacker and Lomax, 2004; Kline, 2010). SEM represents a logical coupling of regression and factor analytic approaches, and allows for simultaneous analysis of the measurement and structural models (Hair et al., 2010; Kline, 2010).

There are five basic procedures involved in all SEM analyses: model specification, model identification, model estimation, model testing, and model modification (Schumacker and Lomax, 2004; Byrne, 2010). Each of these procedures is outlined in this section.

(1) Model Specification

Model specification involves researchers developing a theoretical model. This is a vital first step in SEM (Schumacker and Lomax, 2004). This process must be guided by a combination of theory and empirical results from previous research (Byrne, 2010; Hair et al, 2010). In particular, attention must be paid to include all relevant variables and only those variables that are relevant. If the theoretical model is not consistent with the true model, the theoretical model is said to be misspecified and lacks validity (Schumacker and Lomax, 2004). This may occur if researchers failed to include an

important variable or an important parameter or alternatively, if an unimportant parameter or variable was included in the error (Kline, 2010).

Having developed the theoretical framework of the model, the next step is to illustrate it in a path diagram. A path diagram represents a pictorial portrayal of all relationships in the model. It is a graphical representation of how various elements of the model relate to one another and act as an intuitively appealing essential first step in the SEM process (Raykov and Marcoulides, 2000; Byrne, 2010). While it is not a formal requirement of SEM, construction of a path diagram offers benefits that are too important to ignore. More specifically, the system of hypotheses contained in the model is much more easily comprehensible in visual form than in either verbal or mathematical terms. A path diagram may also help improve the conceptualisation of the model by drawing attention to omitted links and/or excluded variables, therefore decreasing the possibility of specification error (Diamantopoulos, 1994). Thus, path diagrams not only enhance the understanding of structural models, but substantially contribute to the creation of the correct input files (Raykov and Marcoulides, 2000).

In SEM, independent variables are called exogenous variables, while dependent variables are called endogenous variables (Schumacker and Lomax, 2004; Byrne, 2010). Observed variables are directly measured by researchers, while latent variables are not directly observed but are measured indirectly by their respective indicators (observed variables). Latent variables (also called constructs) can function as exogenous or endogenous variables in the model. SEM uses path diagrams which can represent relationships among observed and latent variables. Rectangles or squares represent observed variables, while ovals or circles represent latent variables. Residuals are always unobserved, so they are represented by ovals or circles. Single

headed arrows represent directional effects (regression coefficients) between variables. Double headed arrows represent correlations and covariances, which indicate relationships without an explicitly defined causal direction. In addition, there are arrows labelled with Es and Rs. Es represent measurement error related to observed variables, and Rs are residuals and represent part of the endogenous variable that is not accounted for by the linear influence of other variables in the model. These error terms can be viewed as consisting partly of random error and partly of systematic error that is not explained, but could theoretically be explained by variables or effects not included in the model (Byrne, 2010; Kline, 2010).

(2) Model Identification

In SEM, it is crucial that researchers resolve the identification problem prior to the estimation of the parameters (Schumacker and Lomax, 2004; Kline, 2010). The problem of identification revolves around the question of whether one has sufficient information to obtain a unique solution for the parameters to be estimated by the model (Hair et al., 2010). Thus, identification determines whether it is possible to find unique values for the parameters of the specified model (Kline, 2010). It concerns the correspondence between the information to be estimated (the free parameters) and the information from which it is to be estimated (the observed variances and covariances). Models can be under identified, just identified, or over identified (Hair et al., 2010; Kline, 2010).

A model is considered just identified if it has only one estimate for each parameter and thus generates zero degrees of freedom (Kline, 2010). A just identified model will always provide one unique solution that will be able to perfectly reproduce the

correlation matrix. However, the solution is uninteresting because it has no generalisability (Hair et al., 2010). When the number of unknowns exceed the number of equations, a model is said to be under identified and has negative degrees of freedom. When a model is under identified, it is impossible to determine unique values for the model coefficients (Kline, 2010). Raykov and Marcoulides (2000) provided a straightforward example; suppose one is considering the equation A+B=10, one solution could be A=5, B=5 or A=9, B=1. There is no way of determining the values of A and B because one is dealing with two unknown variables (A and B) and one known variable (one equation). An under identified model implies that there is not enough empirical information to allow its unique estimation, and its estimation should not be relied upon (Hair et al., 2010; Kline, 2010).

The most appealing situation is one in which there are more indicators than unknown variables, and thus the model is over identified and has positive degrees of freedom (Kline et al., 2010). Only models that are identified can be estimated. In an over identified model, there are a number of possible solutions, and the task is to select the one that comes closest to explaining the observed data within some margin of error (Hair et al., 2010). Raykov and Marcoulides (2000) advised researchers to simply count the number of parameters in the model and subtract this from the number of non-redundant elements in the sample correlation matrix, determined as follows: P (P + 1) / 2, where P = the number of observed variables in the model. The resulting difference is referred to as the degrees of freedom. If positive, the model is considered to be identified.

(3) Model Estimation

The purpose of estimation is to generate numerical values for free parameters within the model that produces the implied matrix (Σ) such that the parameter values yield a matrix as close as possible to the sample covariance matrix (S) (Kline, 2010). The estimation process involves the selection of a particular fitting function to minimise the difference between Σ and S. Various estimation techniques are available in SEM including maximum likelihood (ML), weighted least square (WLS), generalised least square (GLS), and asymptotic distribution free (ADF) (Hair et al., 2010; Kline, 2010). An appropriate estimation method to use depends on the nature of the variables to be analysed and the distributional properties of the data (Hair et al., 2010).

In the present study, the statistical software AMOS version 18 was chosen to execute the model estimation by maximum likelihood (ML). Generally, ML is the most preferable and commonly used estimation procedure in SEM (Hair et al., 2010; Kline, 2010). It is efficient and unbiased when the assumption of multivariate normality is met (Byrne, 2010; Hair et al., 2010). ML makes estimates based on maximum probability (likelihood) that the observed covariances are drawn from a population assumed to be the same as that reflected in the coefficient estimates. That is, ML chooses estimates which have the greatest chance of reproducing the observed data (Hair et al., 2010). In addition, ML estimation is accompanied by a whole range of statistics which can be used to assess the extent to which the model is consistent with the data (Kline, 2010). Although this method assumes normality, it remains robust to minor deviations (Hair et al., 2010). Extensive research has found ML to be quite robust to the violation of normality (Chou and Bentler, 1995; Hoyle and Panter, 1995; Olsson et al., 2000; Olsson et al., 2004). Hair et al. (2010) stated that ML performs

reasonably well under a variety of less than optimal analytic conditions, such as small sample size and excessive kurtosis.

(4) Model Testing

Once the parameter estimates are obtained for the SEM model, the next step is to determine how well the data fit the model (Schumacker and Lomax, 2004; Bagozzi and Yi, 2012). Assessing whether a specified model fits the data is one of the most important steps of SEM as it determines whether the model being tested should be accepted or rejected (Kline, 2010). Model fit refers to the extent to which a hypothesised model is consistent with the data (Hair et al., 2010). In SEM, goodness-of-fit is defined as the degree to which the actual/observed input matrix can be predicted by the estimation model (Hair et al., 2010). A model is said to fit the observed data when the covariance matrix it implies is equivalent to the observed covariance matrix. The process of estimation results in an implied covariance matrix Σ, which is as close as possible to the sample covariance matrix S; the closer Σ is to S, the better the fit of the model (Kline, 2010). Model fit represents one of the most commented and controversial areas of SEM. If the model does not fit the data (the observed covariance matrix is statistically different from the covariance structure of the model), either the model or the data should be rejected. The issue of fit assessment has been a subject of great interest and debate in SEM. It is a very complex area and represents a major challenge facing theory developers and researchers (Raykov and Marcoulides, 2000; Hair et al., 2010; Bagozzi and Yi, 2012). Unlike many statistical procedures that have a single, most powerful fit index such as the F test in ANOVA, determining the tests that best suit the SEM model is a matter of the researcher's discretion (Hair et al., 2010; Kline, 2010).

Fit Indices

Several indices and methods are available for researchers to evaluate the model goodness-of-fit in SEM. There are three broad types of the overall goodness-of-fit measures: absolute fit measures, incremental fit measures, and parsimonious fit measures (Hair et al., 2010).

1) Absolute fit measures assess the degree to which the model fits the sample data. Model fit criteria commonly used are chi-square (X^2), goodness-of-fit index (GFI), root mean square residual (RMSEA), and standardised root mean residual (SRMR). First, the most fundamental measure of the overall fit is X^2 statistic. However, this fit index is highly sensitive to sample size. It is unlikely to obtain the desired insignificant statistic in a large sample even when the model fits the empirical data quite well (Hu and Bentler, 1995). When the sample size becomes large (above 200), most models cannot satisfy this criteria (Bagozzi and Yi, 1988; Schumacker and Lomax, 2004; Hair et al., 2010). The fact is that for large sample sizes even small differences between the sample and the estimated covariance or correlation matrix may be significant, even though the differences are not practically meaningful (Hughes et al., 1986; Hu and Bentler, 1995; Sharma, 1996). Thus, X^2 statistic should be used with caution when assessing models using SEM. The small values of chi-square indicate a better model fit (Barret, 2007; Hair et al., 2010). Second, The GFI is based on the ratio of the sum of the squared discrepancies to the observed variances. The GFI ranges from 0 to 1, with values exceeding .9 indicating a good fit to the data (Kline, 2010; Bagozzi and Yi, 2012). Third, RMSEA measure is based on the analysis of residuals, with smaller values below .10 indicating a good fit to the data, and values below .05 indicating an extremely good fit to the data (Hair et al., 2010). According to

Byrne (2010) and Kline (2010), the index falling between .05 and .08 is considered acceptable, whereas between .08 to .10 indicates mediocre fit. The reason is that RMSEA is sensitive to model complexity, thus a complex model is less likely to achieve RMSEA below .05. The fourth index is SRMR. The value falling between .05 and .08 represents an acceptable fit (Hair et al., 2010).

2) Incremental fit measures assess the incremental fit of the proposed model compared to a null model. Two of the widely reported incremental indices are comparative fit index (CFI) and normed fit index (NFI). First, the CFI is based on the non-central X^2 distribution. The CFI ranges from 0 to 1, with values exceeding .90 indicating a good fit to the data (Hair et al., 2010). The second index is the NFI. Similarly, the NFI rages from 0 to 1, with values exceeding .9 indicating a good fit (Byrne, 2010; Kline, 2010).

3) Parsimonious fit measures test the parsimony of the proposed model by evaluating the fit of the model to the number of estimated coefficient required to achieve the level of fit. The fundamental measure is the ratio of chi-square to the degree of freedom or normed chi-square (X^2/df). The X^2/df ratio of below 5 indicates that the proposed model fits the data reasonably well (Hair et al., 2010).

Table 4.1: A Summary of Model Fit Indices

Model Fit Measures	Guidelines
X^2	Smaller is better
X^2/df	<5
GFI	>.90
CFI	>.90
NFI	>.90
RMSEA	<.08
SRMR	<.08

Source: Byrne (2010), Hair et al. (2010), and Kline (2010)

Moreover, in case of the structural model, further evaluation is needed when the model acceptably fits the data as judged by the overall goodness-of-fit measures. The objective for the further evaluation of the structural model is to determine whether each of the theoretical relationships is supported by the data (Diamantopoulos and Siguaw, 2000; Byrne, 2010). Diamantopoulos and Siguaw (2000) identified the four main reasons for the importance of assessing the structural model. First, the structural model is assessed in order to determine whether the signs of the parameters representing the paths between latent variables are consistent with the nature of the causal effect hypothesised to exist between latent variables. Second, it is assessed to determine whether parameter estimates are significant ($p < 0.05$). Third, assuming significance, it is important to assess the magnitude of the parameter estimates, indicating the strength of the theoretical relationships. Finally, it is important to evaluate the squared multiple correlations (R^2), indicating the amount of variance in each endogenous latent variable that is explained by the latent variables linked to it in terms of the theoretical structural model.

(5) Model Modification

If the fit of the implied theoretical model is not as strong as desired, which is often the case with initial models, then the next step is to modify the model and subsequently evaluate this modified model (Schumacker and Lomax, 2004; Byrne, 2010). Modifications can be made by dropping indicators, linking indicators to other latent variables, or allowing correlations among measurement errors (Byrne, 2010; Kline, 2010). This process is known as model modification, which is done to improve the model fit. For example, to identify items that result in the poor fit of the baseline model, an examination of the modification index, factor loadings, and t-values can help determine how to modify the model and make it fit better (Byrne, 2010; Kline, 2010). Since the modification index indicates the improvement in fit, it is logical to modify the item with the largest modification index first. The modification indices represent the expected drop in X^2 if a particular parameter is freely estimated. In terms of the t-value, it refers to a statistical significance between indicators and latent variable, where the items with t-values < 1.96 need to be modified. Low t-value generally results from the fact that there are some items cross-loading onto more than one factor. Another aspect of evaluating items in the model is to examine the standardised factor loading. The magnitude of factor loading for the model should be at least .50 to ensure construct unidimensionality (Hair et al., 2010).

However, researchers must be conscious not to allow testing and revising of models to become a procedure completely determined by statistical results, devoid of theoretical underpinnings (Shook et al., 2004; Byrne, 2010). Theoretical considerations must guide model modifications (Anderson and Gerbings, 1988; Byrne, 2010). Blind use of

modification indices, for example, can lead researchers astray from their original substantive goal (Raykov and Marcoulides, 2000).

4.7.3 Reliability and Validity

Prior to testing of the hypotheses proposed in Chapter Three, the multi-item scales used in the study need to be assessed to ensure that they can achieve at least the acceptable levels of reliability and validity.

(1) Reliability

The concept of reliability was first introduced into measurement theory by Spearman in 1904. Peter (1979) defined reliability as the degree to which measures are free from error and yield consistent results on repeated tests. In other words, reliability is concerned with the repeatability and consistency of empirical measurements. A scale is considered highly reliable when there are patterns of high inter-correlations among the items. To access the reliability of a measure, the internal consistency method is widely accepted.

The internal consistency of a set of measurement items refers to the degree to which items in the set are homogeneous. There are two main forms of internal consistency estimation, split-half method and Cronbach alpha method. For split-half method, the scale is equally divided into two sets of items. The reliability is calculated by estimating the correlation of scores obtained from the two halves. However, this is not a suitable approach if the scale containing few items is halved. The reason is that too small a number of items, particularly fewer than three items in a scale, obviously lead

to low level of reliability (Peterson, 1994). In accordance with common practice, reliability in the study is accessed via the Cronbach alpha coefficient (Cronbach, 1951) because it not only can overcome the above problems, but is also by far the most commonly employed technique in marketing studies (Narver and Slater, 1990). In addition, the composite reliability (CR) and average variance extracted (AVE) are also calculated.

(2) Validity

Reliability is necessary, but not an adequate measure of favourable quantitative research. Reliability indicates consistency in measurement, but does not indicate the degree to which the indicators accurately measure what they are supposed to measure (Malhotra and Birks, 2007).

There are several forms of validity commonly used in assessing the soundness of a measurement. Construct validity has received most of the attention in the social science research. It refers to the extent to which a measure is related to other measures in a manner consistent with theoretically based concepts (Hair et al., 2010). Nunnally (1967) suggested that the extent of construct validity can be evaluated by examining both convergent validity and discriminate validity.

Convergent validity concerns the degree of agreement in two or more measures of the same construct, whereas discriminant validity refers to the extent to which measures of conceptually distinct constructs differ. They can be assessed by analysing the covariance structure of the data through statistical testing of factor analysis (Bagozzi and Phillips, 1991). Construct validity can be evaluated through either exploratory

factor analysis (EFA) or confirmatory factor analysis (CFA). Kelloway (1995) argued that there is no rationale for conducting both exploratory and confirmatory analyses on the same set of data. Hence, the study prefers to employ CFA because some scholars assert that there are some inherent limitations of EFA. Bollen (1989) noticed that EFA is particularly useful during the early stages of research as a preliminary analysis for theory building, but not appropriate for theory testing at later stage. Furthermore, Anderson and Gerbing (1988) argued that EFA does not provide an explicit test of unidimensionality, which refers to the degree to which a set of indicators represent only one underlying construct. On the other hand, CFA provides much more rigorous and precise test of unidimentionality implied by the multiple-indicator measurement model (Anderson and Gerbing, 1988; Kline, 2010). In conclusion, it can be seen that CFA is preferably implemented to verify the convergent and discriminant validity of the constructs.

4.8. Chapter Summary

This chapter discussed the methodological issues relating to the collection of research data. The chapter started with an explanation of the research method, followed by research techniques, method of data collection, sampling process, and questionnaire development. The reminder of this chapter was devoted to data analysis technique, including missing data, structural equation modeling (SEM), and reliability and validity.

CHAPTER 5: RESULTS - PRELIMINARY DATA ANALYSIS

This chapter demonstrates the procedures used to analyse data in a preliminary manner. The first section is concerned with the quality of mail survey, and the second section evaluates the quality of the data. The final section is concerned with the quality of the sample. Figure 5.1 shows the outline of the chapter.

Figure 5.1: Outline of Thesis Structure

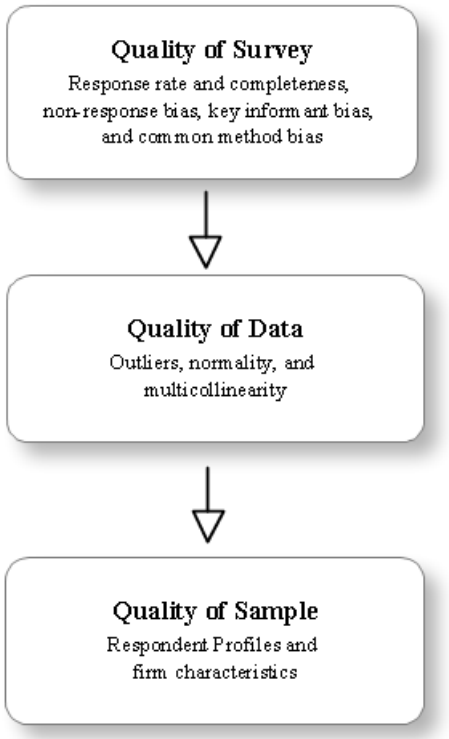

5.1 Quality of Survey

There are four issues concerning the quality of mail survey: response rate and completeness, non-response bias, key informant bias, and common method bias.

5.1.1 Response Rate and Completeness

The data collection process started at the beginning of February up until the end of March 2010, lasting two months altogether. A total of 2,000 questionnaires were sent out by postal mail to the industrial sample drawn across manufacturing export firms in Thailand. Following Dillman's (1987) multiple follow-up techniques, postcards were subsequently mailed to the target respondents two weeks after the first mailing, and the second mail survey was sent four weeks after the initial survey.

By the cut-off date, 354 questionnaires out of 2,000 eligible firms were returned, accounting for an overall response rate of 17.7%. When the response rate is calculated from 320 useable, complete questionnaires (by eliminating 34 questionnaires with missing data), the study achieves a response rate of 16%. The listwise deletion approach, eliminating any questionnaires that contain mission data, is preferable for dealing with missing data problem in this study since a few cases have missing values and the sample size is large (Hair et al., 2010). The response rate of 16% is considered satisfactory (Churchill, 1995; Malhotra and Birks, 2007), and 320 responses are clearly sufficient for data analysis at further stage.

5.1.2 Non-Response Bias

Even though a desired response rate is achieved, it does not guarantee that data received are representative of the population. An inability to obtain a response from some members of the selected sample may lead to bias or systematic distortion in a mail survey (Taylor and Anderson, 1989; Malhotra and Birks, 2007). To assess non-response bias, Armstrong and Overton's (1977) technique was employed. This approach is based on the assumption that the respondents who reply late are more like representatives of non-respondents. Thus, non-response bias exists if there are significant differences in the mean scores of the key variables between early and late respondents.

As such, all respondents were listed by the date of questionnaire obtainment, and then were divided into two different groups. The first quartile (first 25%) represents the early respondents (80 firms), whereas the forth quartile (last 25%) refers to the late respondents (80 firms). The t-test statistics are adopted to determine whether there is an existence of non-response bias in the study. It can be seen from Table 5.1 that none of the t-test results indicate a significant difference between the early and the late groups on the mean scores of the key variables at $p>.05$ level, suggesting that non-response bias is unlikely to be a serious concern in the study.

Table 5.1: Non-Response Bias Test

Variables	Group	Mean	t-value	Sig. (p-value)
Scale of Operation (SCL)	Early Late	4.021 3.992	0.187	.852
Financial Assets (FIN)	Early Late	4.587 4.394	0.992	.323
Physical Assets (PHY)	Early Late	4.612 4.500	0.682	.496
Supply Chain Assets (SPC)	Early Late	4.506 4.359	0.844	.400
Strategic Alliance Assets (STA)	Early Late	4.559 4.478	0.555	.580
External Market Orientation (EMO)	Early Late	4.799 4.773	0.195	.846
Internal Market Orientation (IMO)	Early Late	4.748 4.676	0.526	.600
Informational Capabilities (INF)	Early Late	4.667 4.620	0.336	.738
Relationship Building Capabilities (REL)	Early Late	4.983 4.987	-0.028	.978
Product Development Capabilities (PRD)	Early Late	5.150 5.129	0.123	.902
Cost Advantage (COS)	Early Late	4.557 4.425	0.966	.336
Product Advantage (PRO)	Early Late	5.171 5.016	1.014	.312
Service Advantage (SER)	Early Late	5.197 5.037	1.005	.316
Economic Performance (ECO)	Early Late	4.416 4.319	0.514	.608
Distributor Performance (DIS)	Early Late	5.057 4.977	0.542	.588
End-User Performance (END)	Early Late	5.184 5.169	0.100	.921

In addition to the above assessment, the second test of non-response bias concerns the differences between the early and the late respondent firms in terms of demographic data, namely position, work experiences, type of industries, number of employees, year of establishment, export experience, and average ratio of export to local sale. Since the position and the type of industries were measured by nominal scales, the chi-square test statistics, rather than t-tests, were employed for statistical analysis. Results indicate that no discernible significant difference was found between the early

and the late respondents. For the rest of the demographic data, none of the t-test results indicate a significant difference between the early and the late group. Therefore, it is concluded that non-response bias is unlikely to be a problem in the study.

5.1.3 Key Informant Bias

The use of a single respondent in the mail survey may cause key informant bias if such respondent is insufficiently knowledgeable to complete the questionnaire (Kumar et al., 1993). It is generally accepted that the responses derived from a chief executive officer (CEO), a key member of the firm, can reflect the actual organisational characteristics most accurately (Cycyota and Harrison, 2002). Nevertheless, it is likely that the CEO may assign another key member of the firm such as managing director (MD), general manager (GM), or senior-level manager to take part in the survey instead. In some cases, MD or GM may be the highest management position in the firm. Following the procedure suggested by Pearce (2000), Analysis of Variance (ANOVA) was used to examine differences in mean scores of key variables among top management and other informants. All informants from 320 questionnaires were classified into six groups: 1) chief executive officer (20 firms), 2) managing director (104 firms), 3) general manager (95 firms), 4) marketing and sales manager (61 firms), 5) export manager (11 firms), and 6) other positions such as assistant managing director, accounting manager, factory manager (29 firms).

According to Table 5.2, the results indicate that there are no significant differences among groups based on job position ($p>.05$). In other words, there is no evidence of key informant bias due to the lack of knowledge about their organisations. Therefore,

it can be concluded that key informant bias does not exist, and the single key informant technique is effective to ensure the quality of data in the study.

Table 5.2: Key Informant Bias Test

Variables	F-value	Sig. (p-value)
Scale of Operation (SCL)	1.334	.249
Financial Assets (FIN)	0.478	.793
Physical Assets (PHY)	0.683	.637
Supply Chain Assets (SPC)	0.384	.860
Strategic Alliance Assets (STA)	0.680	.639
External Market Orientation (EMO)	0.774	.569
Internal Market Orientation (IMO)	1.147	.336
Informational Capabilities (INF)	0.534	.750
Relationship Building Capabilities (REL)	0.813	.541
Product Development Capabilities (PRD)	0.700	.624
Cost Advantage (COS)	1.595	.161
Product Advantage (PRO)	0.582	.714
Service Advantage (SER)	0.235	.947
Economic Performance (ECO)	0.772	.571
Distributor Performance (DIS)	0.582	.713
End-User Performance (END)	0.685	.635

5.1.4 Common Method Bias

Common method variance is the variance that is attributable to the method of measurement rather than the constructs the measure represent (Podsakoff et al., 2003; Spector, 2006). This method bias is problematic since the actual phenomena under investigation can be difficult to distinguish from the measurement artefacts (Malhotra et al., 2006). Nonetheless, Malhotra et al. (2007) argued that common method bias occurs in lower levels in the field of marketing when compared to other disciplines, such as education and psychology.

The widely used technique to detect common method bias is the Harman's single-factor test (Podsakoff et al., 2003). The Harman's (1967) test is an exploratory factor analysis of questionnaire items in the study where the factor solution is examined to determine the number of factors that are necessary to account for variance. If a single factor emerges from the exploratory factor analysis or one factor accounts for more than 50% of the variance in the items, method bias is present (Mattila and Enz, 2002; Ashill et al., 2009). Table 5.3 shows the exploratory factor analysis for the items used in the study, which extracted fifteen factors with Eigenvalue greater than one, and totally accounted for 71.94% of the variance. Individual dominant factors account for variance ranging from 1.29% to 36.99%. The absence of a single dominant factor, which accounts for most of the variance, suggests that common method bias is not a serious issue in the study.

Table 5.3: Harman's Single Factor Test

	Extraction Sums of Squared Loadings		
Component	**Total**	**% of Variance**	**Cumulative %**
1	30.329	36.986	36.986
2	7.040	8.588	45.572
3	2.932	3.576	49.148
4	2.629	3.206	52.354
5	1.993	2.430	54.785
6	1.857	2.264	57.049
7	1.647	2.008	59.057
8	1.587	1.935	60.992
9	1.515	1.848	62.840
10	1.435	1.750	64.590
11	1.317	1.607	66.196
12	1.270	1.548	67.745
13	1.223	1.491	69.236
14	1.156	1.410	70.646
15	1.060	1.292	71.939

5.2 Quality of Data

Some statistical tests are primarily required to assess the appropriateness of data as to whether or not they meet the assumptions underlying multivariate statistics. If the data cannot meet the assumptions, the result of multivariate analysis tends to be distorted and biased. The main assumptions include outliers, normality, and multicollinearity (Hair et al., 2010).

5.2.1 Outliers

The term outlier refers to an observation that appears inconsistent with the remainder of the observations in the data set. An observation can be an outlier when any one or more valuables have values outside the expected limit (Hair et al., 2010). It is realised that outlier can affect the statistical data analysis and even distort the results. To

detect potential outliers, the typical approach is to convert the data value to standard scores, namely Z-scores, which have a mean value of 0 and a standard deviation of 1. This technique allows researchers to compare variables conveniently because the values are presented in a standardise format. Following Tabachnick and Fidell's (2007) procedure, the study establishes the threshold value of 3.29 (p<.001) for designation of an outlier, where 320 observations are involved. The result shows that no observation has a Z-score exceeding the threshold of any variable, suggesting that potential outliers are not present.

5.2.2 Normality

Normality is the most fundamental assumption in multivariate analysis. If the variables do not have normal distribution, the calculated estimates can invalidate the conclusions drawn from statistical analysis (Tabachnick and Fidell, 2007). In order to check any deviation from normality, a number of methods can be used. The widely acceptable test for normality is an examination of the measures of distribution, namely skewness and kurtosis, which indicate how much a distribution varies from the normal distribution (Hair et al., 2010). Skewness refers to the symmetry of the distribution, whereas kurtosis refers to the peakedness of the distribution. Skewness and kurtosis should be within the -2 to 2 range where data is normally distributed (Lewis-Beck et al., 2004). Table 5.4 shows that the means of the questionnaire items range from 3.628 to 5.428 and the standard deviations range from 1.083 to 1.525. All values for the items fall within the -1 to 1 range of skewness and kurtosis. Hence, the data collected in the study are normally distributed, and thus, are retained for further multivariate analysis.

Table 5.4: Normality Test

Items		Mean	Standard Deviation	Skewness	Kurtosis
	TANGIBLE EXPORT MARKET-BASED ASSETS (TA)				
	Scale of Operation (SCL)				
TA1	Number of full-time employees.	4.091	1.369	-0.098	-0.359
TA2	Percentage of employees mainly involved in the export function.	3.875	1.268	0.172	-0.349
TA3	Annual turnover.	3.628	1.323	-0.059	-0.408
	Financial Assets (FIN)				
TA4	Availability of financial resources to be devoted to export activities.	4.372	1.368	-0.117	-0.318
TA5	Availability of financial resources to be devoted to the firm.	4.462	1.416	-0.190	-0.532
	Physical Assets (PHY)				
TA6	Use of modern technology and equipment.	4.412	1.312	-0.101	-0.112
TA7	Preferential access to valuable sources of supply.	4.553	1.238	-0.197	-0.346
TA8	Production capacity availability.	4.472	1.355	-0.142	-0.370
	RELATIONAL EXPORT MARKET-BASED ASSETS (RA)				
	Supply Chain Assets (SPC)				
RA1	Extent or nature of the distribution network.	4.234	1.331	-0.100	-0.261
RA2	Relationships with suppliers.	4.331	1.319	-0.191	-0.358
RA3	The uniqueness of our distribution approach.	4.447	1.285	-0.229	-0.171
RA4	Relationships with distribution channel intermediaries.	4.534	1.269	-0.323	-0.098
	Strategic Alliance Assets (STA)				
RA5	Market access through strategic alliances or partnerships.	4.822	1.138	-0.468	0.260
RA6	Shared technology through strategic alliances or partnerships.	4.306	1.201	-0.171	0.080
RA7	Access to strategic partners' managerial know-how and expertise.	4.434	1.170	-0.272	-0.281
RA8	Access to strategic partners' financial resources.	4.166	1.262	-0.136	-0.221
	INTELLECTUAL EXPORT MARKET-BASED ASSETS (IA)				
	External Market Orientation (EMO)				
IA1	In this company, we generate a lot of information concerning trends (e.g., regulations, technological developments, political, economic) in our export markets.	4.303	1.391	-0.035	-0.407
IA2	We constantly monitor our level of commitment and orientation to serving export customer needs.	4.641	1.339	-0.173	-0.499
IA3	We periodically review the likely effect of changes in our export environment (e.g., regulation, technology).	4.791	1.278	-0.382	-0.047
IA4	We generate a lot of information in order to understand the forces which influence our overseas customers' needs and preferences.	4.759	1.344	-0.403	-0.154
IA5	Too much information concerning our export competitors is discarded before it reaches decision makers. (R)	4.441	1.189	0.176	-0.146
IA6	Information which can influence the way we serve our export customers takes forever to reach export personnel. (R)	4.979	1.361	-0.140	-0.790
IA7	Important information about our export customers is often 'lost in the system'. (R)	5.122	1.356	-0.306	-0.535
IA8	Information about our export competitors' activities often reaches relevant personnel too late to be of any use. (R)	4.716	1.271	0.003	-0.599

IA9	Important information concerning export market trends (regulation, technology) is often discarded as it makes its way along the communication chain. (R)	4.972	1.349	-0.288	-0.506
IA10	If a major competitor were to launch an intensive campaign targeted at our foreign customers, we would implement a response immediately.	4.681	1.355	-0.213	-0.256
IA11	We are quick to respond to significant change in our competitors' price structures in foreign markets.	4.622	1.340	-0.243	-0.290
IA12	We are quick to respond to important changes in our export business environment (e.g., regulation, technology, economy).	4.741	1.228	-0.188	-0.336
IA13	We rapidly respond to competitive actions that threaten us in our export markets.	4.541	1.251	-0.093	-0.440
	Internal Market Orientation (IMO)				
IA14	Management tries to find out what employees want from the company	4.428	1.325	-0.263	0.077
IA15	If management notices one of our employees is acting differently to normal, they will try to find out if there is a problem that is causing a change in behaviour.	4.769	1.240	-0.574	0.490
IA16	Management tries to find out our employees' real feelings about their jobs.	4.722	1.211	-0.602	0.305
IA17	Management regularly talks to our staff to find out about their work.	5.006	1.227	-0.535	0.013
IA18	We have regular staff appraisals in which we discuss what employees want.	4.669	1.290	-0.527	-0.010
IA19	Management meets with our employees at least once a year to find out what expectations they have of their jobs for the future.	5.062	1.471	-0.893	0.316
IA20	Management interacts directly with our employees to find out how to make them more satisfied.	4.912	1.324	-0.637	0.348
IA21	We do a lot of internal marketing research e.g., job satisfaction, work motivation	4.437	1.342	-0.296	-0.346
IA22	We survey our staff at least once a year to get information about their attitudes to their work.	4.500	1.414	-0.338	-0.403
IA23	We survey our employees at least once a year to assess the quality of employment.	4.419	1.462	-0.396	-0.506
IA24	We often talk with our survey people to identify influences on our employees' behaviour (e.g., unions, sales representatives, customers).	4.212	1.444	-0.194	-0.477
IA25	We have regular staff meetings with employees at all levels attending.	4.816	1.525	-0.534	-0.378
IA26	Management regularly reports back to our staff about issues that affect their working environment.	4.759	1.230	-0.428	-0.189
IA27	Management regularly meets with all my staff to report about issues relating to the whole organisation.	4.831	1.328	-0.365	-0.365
IA28	When we find out that employees are unhappy with our supervision or management, we take corrective action.	4.881	1.210	-0.357	-0.118
IA29	When we find that employees would like us to modify their condition of employment, the departments make concerted efforts to do so.	4.537	1.279	-0.405	-0.121

IA30	We make changes to what we do when employee feedback indicates that they are dissatisfied with the status quo.	4.619	1.205	-0.227	-0.155
	EXPORT MARKET-BASED CAPABILTIES (MC)				
	Informational Capabilities (INF)				
MC1	Identification of prospective customers.	4.562	1.126	-0.282	0.245
MC2	Capturing important market information.	4.594	1.113	-0.176	0.183
MC3	Acquiring export market-related information.	4.487	1.249	-0.306	0.211
MC4	Making contacts in the export markets.	4.578	1.193	-0.175	0.095
MC5	Monitoring competitive products in the export markets.	4.662	1.229	-0.211	-0.347
	Relationship Building Capabilities (REL)				
MC6	Understanding overseas customer requirements.	4.940	1.226	-0.327	-0.243
MC7	Establishing and maintaining close supplier relationships.	4.984	1.157	-0.287	-0.272
MC8	Establishing and maintaining close overseas distributor relationships.	4.922	1.375	-0.448	-0.262
	Product Development Capabilities (PRD)				
MC9	Development of new products for our export customers.	4.887	1.416	-0.393	-0.368
MC10	Building of the product to designated or revised specifications.	5.350	1.238	-0.580	0.096
MC11	Adoption of new methods and ideas in the manufacturing process.	5.050	1.263	-0.263	-0.341
	EXPORT COMPETITIVE ADVANTAGE (CA)				
	Cost Advantage (COS)				
CA1	Cost of raw materials.	4.316	1.119	-0.052	0.257
CA2	Production cost per unit.	4.306	1.134	0.117	-0.135
CA3	Cost of goods sold.	4.356	1.105	0.003	-0.108
CA4	Selling price to end-user abroad.	4.587	1.184	-0.022	-0.042
	Product Advantage (PRO)				
CA5	Product quality.	5.428	1.159	-0.487	-0.101
CA6	Packaging.	4.809	1.192	0.027	-0.136
CA7	Design and Style.	5.028	1.230	-0.125	-0.689
CA8	Brand image abroad.	4.928	1.416	-0.459	-0.281
	Service Advantage (SER)				
CA9	Product accessibility.	4.859	1.297	-0.274	-0.414
CA10	Technical support/after sales service.	5.050	1.281	-0.562	0.210
CA11	Delivery speed and reliability.	5.256	1.207	-0.331	-0.522
CA12	Product line breadth.	4.953	1.462	-0.457	-0.497
	EXPORT PERFORMANCE (EP)				
	Economic Performance (ECO)				
EP1	Export sales volume.	4.166	1.507	0.014	-0.602
EP2	Export market share.	4.072	1.448	-0.014	-0.551
EP3	Profitability.	4.419	1.332	-0.177	-0.228
EP4	Percentage of sales revenue derived from products introduced in export markets during the past three years.	4.306	1.434	-0.248	-0.338
	Distributor Performance (DIS)				
EP5	Service quality to distributors.	4.781	1.146	-0.369	0.515
EP6	Quality of your company's relationship with distributors.	4.912	1.182	-0.472	0.438
EP7	Reputation of your company to distributors.	5.234	1.218	-0.489	-0.197
EP8	Distributor loyalty to your company.	4.972	1.212	-0.562	0.237
EP9	Overall satisfaction with your total product/service offering to distributors.	5.162	1.099	-0.326	-0.321

	End-User Performance (END)				
EP10	Quality of your company's end-user customer relationships.	5.053	1.139	-0.399	-0.110
EP11	Reputation of your company to end-user.	5.190	1.174	-0.446	-0.319
EP12	End-user customer loyalty to your firm.	4.975	1.139	-0.438	0.085
EP13	End-user customer satisfaction.	5.184	1.083	-0.447	0.086

Note: R = Reverse scale

5.2.3 Multicollinearity

One of the primary assumptions for multivariate data analysis is multicollinearity. Hair et al. (2010) suggested that an investigation of multicollinearity is needed in order to avoid difficulties in drawing inferences and misleading coefficient signs. There are several statistical techniques to check for multicollinearity. The most commonly used and simplest approach is the examination of the correlation matrix. If the correlations are lower than .80, multicollinearity is not present (Hair et al., 2010). From Table 5.5, after inspecting the correlations between each pair of variables, the matrix shows that all correlations fall below .80, where the values vary from 0.266 to 0.744. Thus, it can be concluded that multicollinearity is not present in the study.

Table 5.5: Correlation Matrix

	SCL	FIN	PHY	SPC	STA	EMO	IMO	INF	REL	PRD	COS	PRO	SER	ECO	DIS	END
SCL	1															
FIN	.531	1														
PHY	.647	.548	1													
SPC	.673	.478	.640	1												
STA	.572	.522	.649	.744	1											
EMO	.334	.311	.442	.477	.504	1										
IMO	.266	.173	.323	.358	.375	.631	1									
INF	.591	.451	.582	.705	.636	.577	.470	1								
REL	.545	.450	.588	.658	.634	.550	.386	.739	1							
PRD	.463	.348	.523	.561	.588	.541	.535	.666	.727	1						
COS	.462	.423	.559	.536	.548	.405	.307	.582	.569	.542	1					
PRO	.500	.376	.557	.565	.519	.402	.369	.574	.527	.623	.550	1				
SER	.533	.449	.606	.659	.604	.527	.409	.679	.651	.646	.591	.702	1			
ECO	.687	.507	.575	.687	.625	.494	.302	.649	.599	.528	.621	.537	.616	1		
DIS	.590	.477	.588	.673	.584	.514	.348	.596	.698	.617	.545	.661	.699	.720	1	
END	.458	.366	.508	.578	.518	.453	.379	.567	.557	.568	.534	.692	.651	.601	.728	1

All correlations are significant at the .01 level.

In addition to the correlation matrix, another method to detect multicollinearity is the assessment of the tolerance value and Variance Inflation Factor (VIF). The literature suggests that a small tolerance value (below .10) or a large VIF value (more than 10) introduce multicollinearity problem (Hair et al., 2010). The results from Table 5.6 show that the means of the theoretical constructs range from 3.86 to 5.10. All tolerance scores are more than .10, and all VIF scores fall far below 10 for all variables (.252 to .5941 and 3.966 to .682, respectively). Therefore, multicollinearity is not a problem in the study.

Table 5.6: Multicollinearity Test

Variables	Mean	Standard Deviation	Tolerance	VIF
Scale of Operation (SCL)	3.865	1.089	0.369	2.710
Financial Assets (FIN)	4.417	1.344	0.594	1.682
Physical Assets (PHY)	4.479	1.134	0.393	2.544
Supply Chain Assets (SPC)	4.387	1.150	0.282	3.541
Strategic Alliance Assets (STA)	4.432	0.997	0.346	2.891
External Market Orientation (EMO)	4.716	0.908	0.430	2.325
Internal Market Orientation (IMO)	4.681	0.907	0.512	1.952
Informational Capabilities (INF)	4.577	1.012	0.290	3.445
Relationship Building Capabilities (REL)	4.949	1.112	0.275	3.635
Product Development Capabilities (PRD)	5.096	1.175	0.329	3.042
Cost Advantage (COS)	4.391	0.955	0.476	2.102
Product Advantage (PRO)	5.048	1.035	0.355	2.813
Service Advantage (SER)	5.030	1.092	0.322	3.101
Economic Performance (ECO)	4.240	1.280	0.293	3.411
Distributor Performance (DIS)	5.012	1.033	0.252	3.966
End-User Performance (END)	5.101	1.046	0.368	2.719

5.3 Quality of Sample

5.3.1 Respondent Profiles

Respondent profiles are displayed in Table 5.7. Around 70% of the 320 respondents are in top management positions, namely chief executive officers (6.2%), managing director (32.5%), and general manager (29.7%). These people have the ultimate authority and responsibility for decision making within their firms. The remaining respondents include marketing and sales manager (19.1%), export manager (3.4%), and other management positions (9.1%) such as accounting manager, assistant managing director, and factory manager. In addition, three quarters of the 320 respondents have more than 5 years of work experience in exporting. Overall, the study is successful in reaching target respondents who are supposed to be knowledgeable about the issues being researched.

Table 5.7: Respondent Profiles

	Frequency	Percent
Position		
Chief Executive Officer	20	6.2%
Managing Director	104	32.5%
General Manager	95	29.7%
Marketing and Sales Manager	61	19.1%
Export Manager	11	3.4%
Others	29	9.1%
Work Experience		
Less than 5 years	83	25.9%
6 – 10 years	89	27.8%
11 – 15 years	52	16.2%
16 – 20 years	51	15.9%
More than 21 years	45	14.1%

5.3.2 Firm Characteristics

Table 5.8 illustrates the sample firm characteristics. The sample of 320 responding firms come from a variety of manufacturing industry types in Thailand. These include food processing (24.4%), furniture and home decoration (19.1%), textiles and garments (13.4%), electronics and electrical products (7.5%), chemical and plastics (7.5%), gems and jewellery (6.9%), building materials and hardware items (6.9%), automotive parts and accessories (5.3%), leather products (3.1%), and others (5.9%) such as gifts, stationary, medical suppliers and machinery.

The number of employees indicates the diversification of the manufacturing export firms. Among 320 responding firms, 36.9% have 51-200 employees, 33.4% have between 20-50 employees, and 29.7% have more than 201 employees. The majority of the firms have been established for more than 10 years. About two-thirds of the firms have more than 10 years of experience in exporting activities, and three-fourths of the firms have an average of more than 25% for the ratio of export to local sale. The major export markets of the responding firms are Asia and Pacific (69.4%), Central and West Europe (61.9%), ASEAN (58.8%), North America (51.6%), and Middle East (37.8%). The rest are Africa (19.7%), Central and South America (16.9%), and Eastern Europe (16.2%). From the sample firm characteristics, it can be concluded that most of them are intensively engaged in export activities.

Table 5.8: Firm Characteristics

	Frequency	Percent
Type of Industry		
Food Processing	78	24.4%
Automotive Parts and Accessories	17	5.3%
Electronics and Electrical Products	24	7.5%
Textiles and Garments	43	13.4%
Gems and Jewellery	22	6.9%
Furniture and Home Decoration	61	19.1%
Building Materials and Hardware Items	22	6.9%
Leather Products	10	3.1%
Chemical and Plastics	24	7.5%
Others	19	5.9%
Number of Employees		
20 - 50	107	33.4%
51 - 200	118	36.9%
More than 201	95	29.7%
Year of Establishment		
Less than 10 years	65	20.3%
11 – 20 years	117	36.6%
21 – 30 years	81	25.3%
More than 31 years	57	17.8%
Export Experience		
Less than 10 years	123	38.4
11 – 20 years	122	38.1
More than 21 years	75	23.4
Average Ratio of Export to Local Sale		
Less than 25%	82	25.6%
26 – 50%	64	20.0%
More than 51%	174	54.3%
Export Markets		
North America (U.S.A., Canada)	165	51.6%
Central and South America (Mexico, Brazil, Argentina, Caribbean Countries…)	54	16.9%
Central and Western Europe (Italy, France, England, German, Belgium, Denmark, Greek…)	198	61.9%
Eastern Europe (Russia, Bulgaria, Hungary, Poland…)	52	16.2%
Middle East (United Arab Emirates, Saudi Arabia, Israel, Kuwait …)	121	37.8%
Africa (Egypt, Nigeria, Morocco, South Africa…)	63	19.7%
ASEAN (Malaysia, Philippines, Indonesia, Singapore, Brunei, Cambodia, Vietnam, Laos, Myanmar)	188	58.8%
Asia and Pacific (Japan, China, South Korea, Taiwan, Australia, New Zealand…)	220	69.4%

5.4 Chapter Summary

This chapter presented the procedures used to analyse data in a preliminary manner. The assessment of the quality of the mail survey provided satisfactory results, and the quality of data was deemed suitable for further multivariate analysis. Finally, the quality of the sample was confirmed by the respondent profiles and sample firm characteristics.

CHAPTER 6: RESULTS - STRUCTUAL EQUATION MODELING

The study adopted structural equation modeling (SEM) as a technique to analyse the data set of 320 responding firms (N = 320) through the use of a two-step approach suggested by Anderson and Gerbing (1988). First, SEM is used to perform confirmatory factor analysis (CFA) on all theoretical constructs. This step is known as testing the measurement model. The measurement model specifies which observed variables measure each latent variable, and the model also describes the measurement properties (reliability and validity). Second, SEM is used to test the proposed research framework exhibited in Chapter Three. This step is associated with testing the structural model, which represents the relationships among the latent variables. The development of methods of analysis involving structural equation models with latent variables has provided researchers considerable means to construct, test, and modify theories (Anderson and Gerbing, 1982; Kline, 2010). Figure 6.1 shows the outline of this chapter.

Figure 6.1: Outline of Thesis Structure

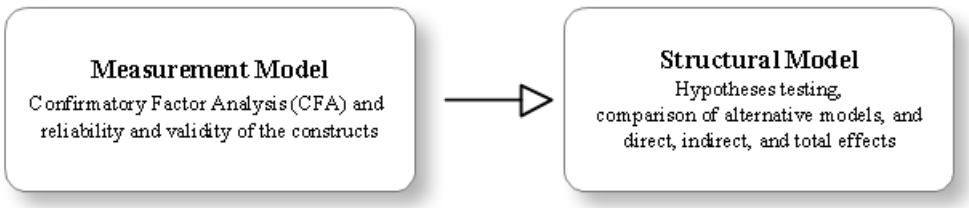

6.1 Measurement Model

The measurement model is the portion of the model that specifies how the observed variables depend on the unobserved or latent variables (Arbuckle, 2009). In other words, the measurement model aims to specify which items correspond to each latent variable (Kline, 2010). Each theoretical construct underpinning the study was separately analysed in a measurement model. If the results are not consistent with a priori specified measurement model, then the measurement model should be respecified (Byrne, 2010). SEM is a statistical technique that allows for the creation of latent variables by observed indicators, model measurement errors for the observed variables, and examine a priori theoretical and measurement assumptions (Schumacker and Lomax, 2004; Kline, 2010). The measurement models have been evaluated in two steps. The first step assesses the unidimensionality of each factor by confirmatory factor analysis (CFA), and the second step intends to assess the reliability and validity of the theoretical constructs. These two steps are discussed below.

6.1.1 Confirmatory Factor Analysis (CFA)

Each theoretical construct was assessed for unidimensionality by Confirmatory Factor Analysis (CFA). This process is known as the measurement model, which is an important step in the SEM procedure. The CFA analysis provides a rigorous and precise test of unidimensionality implied by the multiple-indicator measurement model (Schumacker and Lomax, 2004). It is a confirmatory technique, which is theory driven. Thus, the planning of the analysis is driven by the theoretical relationships among the observed and unobserved variables (Kline, 2010). When a

CFA is conducted, a hypothesised model is used to estimate a population covariance matrix that is compared with the observed covariance matrix. The primary objective of a CFA is to determine the ability of a predefined factor model to fit an observed set of data (Hair et al., 2010). In other words, the CFA technique provides information regarding which observed variables are best suited as indicators of the unobserved variables. It validates the model before making any attempt to evaluate the structural model (Raykov and Marcoulides, 2000; Kline, 2010).

The second-factor model is used to test the construct validity in the study because each theoretical construct are subsequently loaded into the structural model as an aggregate construct. Such second-order model consists of a higher order latent variable that is modelled to casually affect a number of first order latent variables (cf. Heide and John, 1992; Morgan et al., 2004).

6.1.1.1 Tangible Export Market-Based Assets

Tangible export market-based assets (TA) consist of three dimensions: scale of operation (SCL), financial assets (FIN), and physical assets (PHY). The CFA was performed to validate the measurement model of this theoretical construct through second-order factor analysis.

The assessment of the model of tangible export market-based assets is performed by examining a number of goodness-of-fit statistics, modification indices, factor loading, and t-values. If the measurement model possesses an unacceptable fit, respecification is necessary (See Data Analysis Technique in Chapter Four). According to Figure 6.2,

the analysis of the baseline model indicates a good fit to the data ($X^2_{(17)} = 38.81$, $X^2/df = 2.28$, GFI = .97, CFI = .98, NFI = .97, RMSEA = .063, SRMR = .028), with high factor loadings (>.50) and t-values (>1.96). The model demonstrates strong links between each observed variable to its respective latent variable as indicated by the significance and coefficients of the paths. All second-order factor loadings are highly significant, providing justification for the acceptance of the second-order model. Thus, the CFA results provide support for the second-order model of tangible export market-based assets, and a total of eight items are used for further data analysis.

Figure 6.2: Second-Order Model of Tangible Export Market-Based Assets

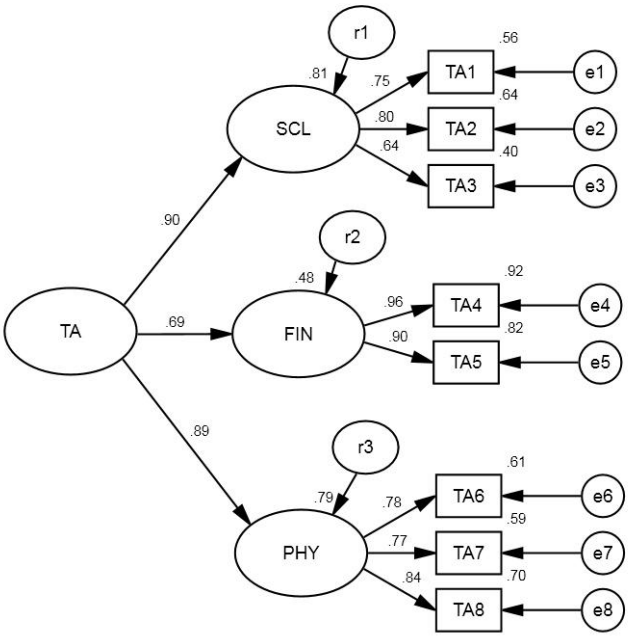

6.1.1.2 Relational Export Market-Based Assets

Relational export market-based assets (RA) capture two dimensions: supply chain assets (SPC) and strategic alliance assets (STA). The CFA analysis of the baseline model indicates an unacceptable fit to the data ($X^2_{(19)} = 82.59$, $X^2/df = 4.35$, GFI = .94,

CFI = .96, NFI = .95, RMSEA = .102, SRMR = .041). To improve the model's performance, the modification indices and standardised residuals were examined to determine which items should be deleted (Byrne, 2010; Kline, 2010). Only one item (RA1) was deleted, whereas the remaining seven items, which provide acceptable modification index, factor loading, and t-value, were retained. According to Figure 6.3, the modified model of relational export market-based assets achieves construct validity and unidimensionality ($X^2_{(13)}$ = 35.48, X^2/df = 2.73, GFI = .97, CFI = .98, NFI = .97, RMSEA = .074, SRMR = .032). In other words, the second-order model yields an excellent fit across all fit criteria. All second-order factor loadings are highly significant, and all factor loadings and t-values are greater than .50 and 1.96 at p<.05, respectively. Thus, the CFA results provide support for the second-order model of relational export market-based assets.

Figure 6.3: Second-Order Model of Relational Export Market-Based Assets

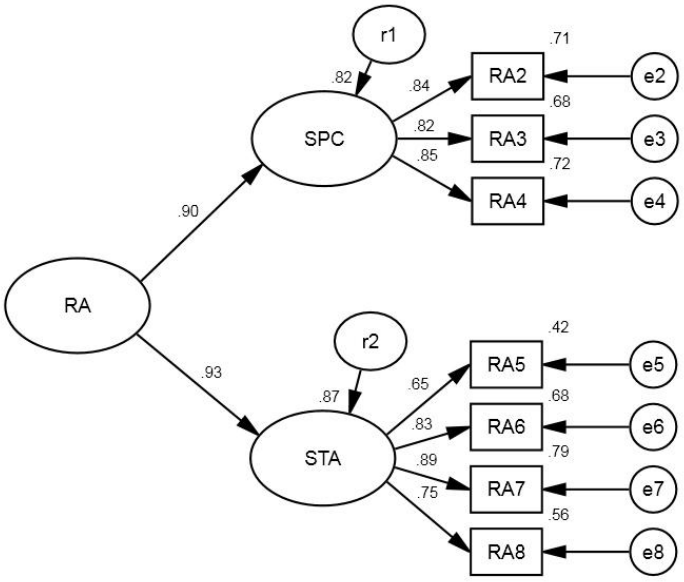

6.1.1.3 Intellectual Export Market-Based Assets

Intellectual export market-based assets (IA) are composed of two dimensions: external market orientation (EMO) and internal market orientation (IMO). The CFA analysis of the baseline model indicates a poor fit to the data ($X^2_{(404)}$ = 2006.88, X^2/df = 4.97, GFI = .66, CFI = .74, NFI = .70, RMSEA = .114, SRMR = .084). This is because the construct of intellectual export market-based assets contain thirty items, which makes it difficult to achieve the model fit (Byrne, 2012; Kline, 2010). Thus, the initial measurement model was modified through standard CFA refinement procedures. An examination of the modification indices reveals many redundant items. These items with large standardised residuals and modification indices were eliminated one at a time until attaining generally acceptable model fit thresholds without a substantial reduction in the content of the construct (Byrne, 2010; Kline, 2010). After completing the process, fifteen items (IA5 – IA7, IA9 – IA12, IA14 – IA15, IA17, IA22 – IA23, IA25, IA27, IA29) were deleted from the original thirty items, and this process of scale refinement then provided a substantial improvement in fit. According to Figure 6.4, the modified model of intellectual export market-based assets has a good validation, and it is a reasonable representation of the data ($X^2_{(64)}$ = 173.61, X^2/df = 2.71, GFI = .92, CFI = .94, NFI = .91, RMSEA = .072, SRMR = .056). With high factor loadings (>.50) and t-values (>1.96), it provides justification for the acceptance of the second-order model of intellectual export market-based assets.

Figure 6.4: Second-Order Model of Intellectual Export Market-Based Assets

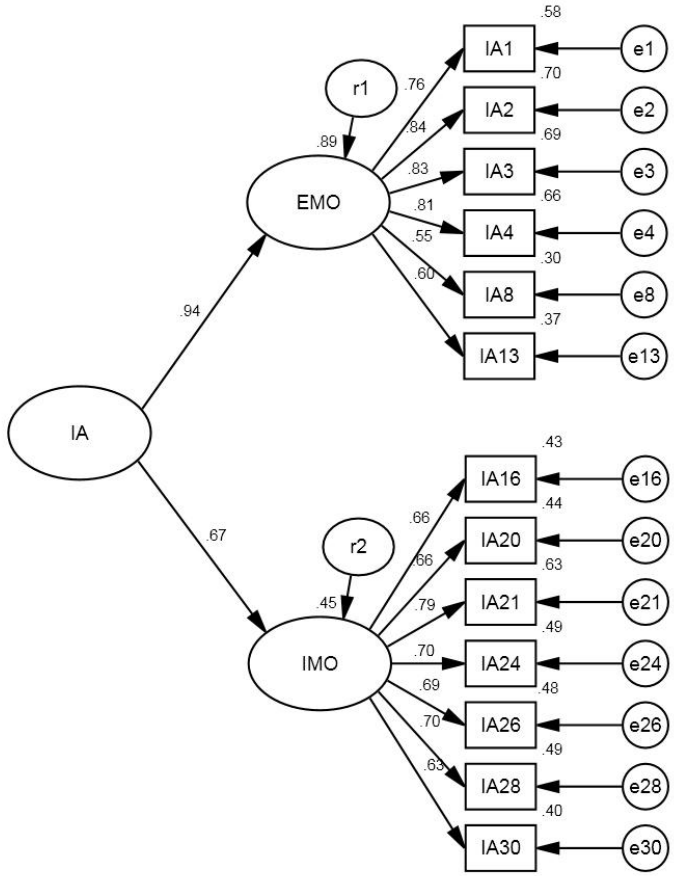

6.1.1.4 Export Market-Based Capabilities

Export market-based capabilities (MC) consists of three dimensions: informational capabilities (INF), relationship building capabilities (REL), and product development capabilities (PRD). The CFA analysis of the baseline model indicates an unacceptable fit to the data ($X^2_{(41)}$ = 179.19, X^2/df = 4.37, GFI = .91, CFI = .95, NFI = .93, RMSEA = .103, SRMR = .038). To improve the model's performance, the modification indices and standardised residuals were examined to determine which items should be deleted. As a result, two items (MC1 and MC6) were deleted from the original eleven items. According to Figure 6.5, the modified model of export market-based capabilities

achieves construct validity and unidimensionality ($X^2_{(24)}$ =50.43, X^2/df = 2.10, GFI = .97, CFI = .99, NFI = .97, RMSEA = .059, SRMR =.022), with high factor loadings (>.50) and t-values (>1.96). All second-order factor loadings are highly significant, providing justification for the acceptance of the second-order model. Thus, the CFA results provide support for the second-order model of export market-based capabilities.

Figure 6.5: Second-Order Model of Export Market-Based Capabilities

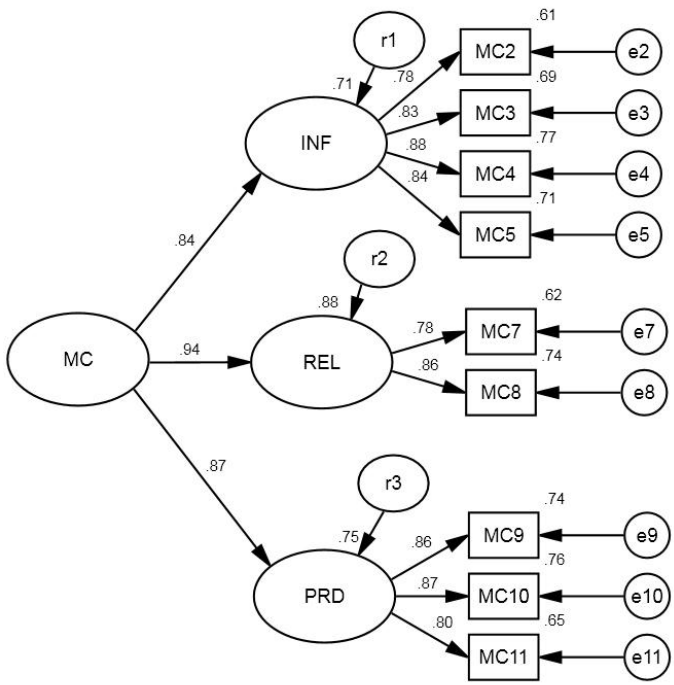

6.1.1.5 Export Competitive Advantage

Export competitive advantage (CA) captures three dimensions: cost advantage (COS), product advantage (PRO), and service advantage (SER). The CFA analysis of the baseline model indicates an unacceptable fit to the data ($X^2_{(51)}$ = 211.01, X^2/df = 4.14, GFI = .91, CFI = .93, NFI = .91, RMSEA = .099, SRMR = .068). To improve the model's performance, the modification indices and standardised residuals were

examined to determine which items should be eliminated one at a time until an acceptable model is identified. Based on this ground, three items (CA4, CA6, and CA12) are deleted from the original twelve items. According to Figure 6.6, the modified model of export competitive advantage achieves construct validity and unidimensionality ($X^2_{(24)}$ = 64.58, X^2/df = 2.69, GFI = .96, CFI = .98, NFI = .96, RMSEA = .073, SRMR = .032), with high factor loadings (>.50) and t-values (>1.96). All second-order factor loadings are highly significant, providing justification for the acceptance of the second-order model. The second-order model of export competitive advantage yields an excellent fit across all fit criteria's.

Figure 6.6: Second-Order Model of Export Competitive Advantage

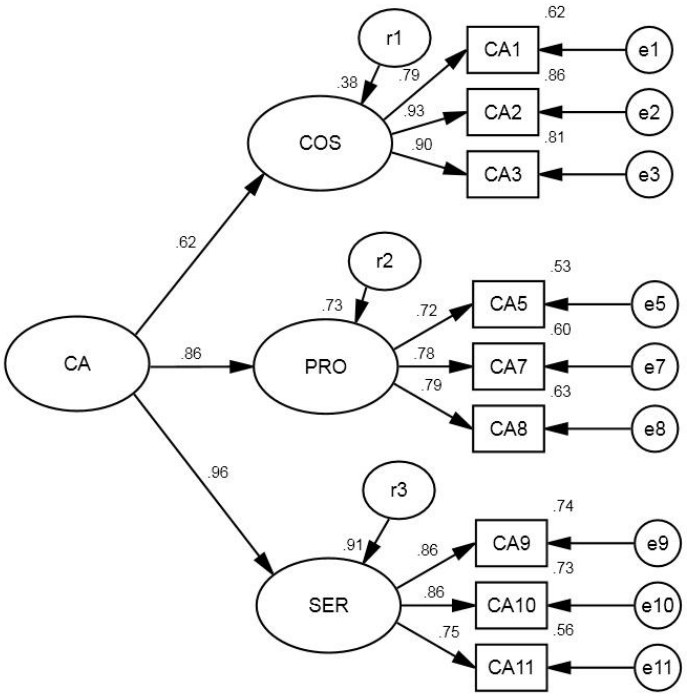

6.1.1.6 Export Performance

Export performance (EP) is composed of three dimensions: economic performance (ECO), distributor performance (DIS), and end-user performance (END). The CFA analysis of the baseline model indicates an unacceptable fit to the data ($X^2_{(62)} = 356.54$, $X^2/df = 5.75$, GFI = .85, CFI = .93, NFI = .92, RMSEA = .122, SRMR = .054). To improve the model's performance, the modification indices and standardised residuals were examined to determine which items should be deleted. As a result, four items (EP3, EP5, EP6, and EP12) are eliminated from the original thirteen items. According to Figure 6.7, the modified model of export performance achieves construct validity and unidimensionality ($X^2_{(24)} = 62.06$, $X^2/df = 2.59$, GFI = .959, CFI = .99, NFI = .98, RMSEA = .071, SRMR = .028), with high factor loadings (>.50) and t-values (>1.96). All second-order factor loadings are highly significant, providing justification for the acceptance of the second-order model. Thus, the CFA results provide support for the second-order model of export performance.

Figure 6.7: Second-Order Model of Export Performance

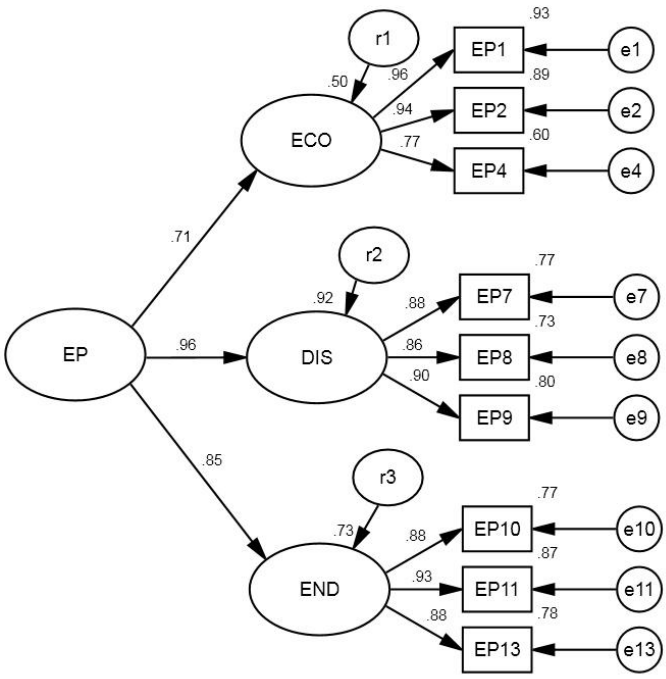

6.1.2 Reliability and Validity of the Constructs

Before testing the theoretical relationships in the structural model, the reliability and validity of the underlying constructs were assessed. The results are reported in Table 6.2.

Table 6.2: Items, Mean, Standard Deviation, Loading, Cronbach's Alpha, Composite Reliability (CR), and Average Variance Extracted (AVE)

		Standardised Loading		Cronbach's Alpha		CR	AVE
	TANGIBLE EXPORT MARKET-BASED ASSETS (TA)				.886	.801	.828
	Scale of Operation (SCL) Mean = 3.56 SD = 1.09		.90	.765			
TA1	Number of full-time employees.	.75					
TA2	Percentage of employees mainly involved in the export function.	.80					
TA3	Annual turnover.	.64					
	Financial Assets (FIN) Mean = 4.42 SD = 1.34		.69	.928			
TA4	Availability of financial resources to be devoted to export activities.	.96					
TA5	Availability of financial resources to be devoted to the firm.	.90					
	Physical Assets (PHY) Mean = 4.48 SD = 1.13		.89	.840			
TA6	Use of modern technology and equipment.	.78					
TA7	Preferential access to valuable sources of supply.	.77					
TA8	Production capacity availability.	.84					
	RELATIONA EXPORT MARKET-BASED ASSETS (RA)				.910	.911	.918
	Supply Chain Assets (SPC) Mean = 4.44 SD = 1.15		.90	.876			
RA2	Relationships with suppliers.	.84					
RA3	The uniqueness of our distribution approach.	.82					
RA4	Relationships with distribution channel intermediaries.	.85					
	Strategic Alliance Assets (STA) Mean = 4.43 SD = 0.99		.93	.856			
RA5	Market access through strategic alliances or partnerships.	.65					
RA6	Shared technology through strategic alliances or partnerships.	.83					
RA7	Access to strategic partners' managerial know-how and expertise.	.89					
RA8	Access to strategic partners' financial resources.	.75					
	INTELLECTUAL EXPORT MARKET-BASED ASSETS (IA)				.902	.777	.808
	External Market Orientation (EMO) Mean =4.62 SD =1.03		.94	.874			
IA1	In this company, we generate a lot of information concerning trends (e.g., regulations, technological developments, political, economic) in our export market.	.76					
IA2	We constantly monitor our level of commitment and orientation to serving export customer needs.	.84					
IA3	We periodically review the likely effect of changes in our export environment (e.g., regulation, technology).	.83					
IA4	We generate a lot of information in order to understand the forces which influence our overseas customers' needs and preferences.	.81					

IA8	Information about our export competitors' activities often reaches relevant personnel too late to be of any use. (R)	.55					
IA13	We rapidly respond to competitive actions that threaten us in our export markets.	.60					
	Internal Market Orientation (IMO) Mean = 4.65 SD = 0.95		.67	.864			
IA16	Management tries to find out our employees' real feelings about their jobs.	.66					
IA20	Management interacts directly with our employees to find out how to make them more satisfied.	.66					
IA21	We do a lot of employee research e.g., job satisfaction, work motivation.	.79					
IA24	We often talk with our survey people to identify influences on our employees' behaviour (e.g., unions, sales representatives, customers).	.70					
IA26	Management regularly reports back to our staff about issues that affect their working environment.	.69					
IA28	When we find out that employees are unhappy with our supervision or management, we take corrective action.	.70					
IA30	We make changes to what we do when employee feedback indicates that they are dissatisfied with the status quo.	.63					
	EXPORT MARKET-BASED CAPABILITIES (MC)				.925	.871	.884
	Informational Capabilities (INF) Mean = 4.58 SD = 1.05		.84	.900			
MC2	Capturing important market information.	.78					
MC3	Acquiring export market-related information.	.83					
MC4	Making contacts in the export markets.	.88					
MC5	Monitoring competitive products in the export markets.	.84					
	Relationship Building Capabilities (REL) Mean = 4.95 SD = 116		.94	.798			
MC7	Establishing and maintaining close supplier relationships.	.78					
MC8	Establishing and maintaining close overseas distributor relationships.	.86					
	Product Development Capabilities (PRD) Mean = 5.09 SD = 1.17		.87	.880			
MC9	Development of new products for our export customers.	.86					
MC10	Building of the product to designated or revised specifications.	.87					
MC11	Adoption of new methods and ideas in the manufacturing process.	.80					
	EXPORT COMPETITIVE ADVANTAGE (CA)				.897	.780	.809
	Cost Advantage (COS) Mean = 4.33 SD = 1.02		.62	.904			
CA1	Cost of raw materials.	.79					
CA2	Production cost per unit.	.93					
CA3	Cost of goods sold.	.90					
	Product Advantage (PRO) Mean = 5.13 SD = 1.08		.86	.804			
CA5	Product quality.	.72					
CA7	Design and Style.	.78					
CA8	Brand image abroad.	.79					
	Service Advantage (SER) Mean = 5.05 SD = 1.12		.96	.862			
CA9	Product accessibility.	.86					
CA10	Technical support/after sales service.	.86					
CA11	Delivery speed and reliability.	.75					
	EXPORT PERFORMANCE (EP)				.933	.819	.841
	Economic Performance (ECO) Mean = 4.18 SD = 1.36		.71	.919			
EP1	Export sales volume.	.96					
EP2	Export market share.	.94					

EP4	Percentage of sales revenue derived from products introduced in export markets during the past three years.	.77					
	Distributor Performance (DIS) Mean = 5.12 SD = 1.08		.96	.908			
EP7	Reputation of your company to distributors.	.88					
EP8	Distributor loyalty to your company.	.86					
EP9	Overall satisfaction with your total product/service offering to distributors.	.90					
	End-User Performance (END) Mean = 5.14 SD = 1.05		.85	.924			
EP10	Quality of your company's end-user customer relationships.	.88					
EP11	Reputation of your company to end-user.	.93					
EP13	End-user customer satisfaction.	.88					

Note: R = Reverse scale

In terms of reliability, Table 6.2 shows that Cronbach's coefficient alphas of all the constructs exceed the suggested level of .70 (Nunnally, 1967). CR and AVE are calculated from model estimates using the CR formula and AVE formula given by Fornell and Larcker (1981) and Nunnally and Bernstein (1994). Bagozzi and Yi (1988) recommended that CR should be equal to or greater than .60, and AVE should be equal to or greater than .50. All constructs evidently exceed these suggested benchmarks. For convergent validity, the results indicate that all factor loadings for items measuring the same construct are statistically significant (Anderson and Gerbing, 1988; Hair et al., 2010). The results of factor loadings show that all factors include high loading (> .50) and are statistically significant (p<0.001).

To assess discriminant validity of second-order constructs, a series of pairwise confirmatory factor analysis is employed (Anderson and Gerbing, 1988). A two-dimensional model of each pair of theoretical constructs was developed, and then forced into a single underlying factor, leading to a significant deterioration of model fit (Bagozzi and Philips, 1982; Ashill et al., 2009). The result in Table 6.3 shows that all Chi-square differences were significant ($\Delta X^2_{(1)} > 6.635$; p<.01), which indicate

discriminant validity. According to all the aforementioned assessments, a conclusion can be made that six measurement models used in the study are within the acceptable level, supporting the reliability and validity of the theoretical constructs.

Table 6.3: Assessment of Discriminant Validity

	TA	RA	IA	MC	CA	EP
TA	-					
RA	35.044	-				
IA	82.755	57.609	-			
MC	60.649	39.931	29.408	-		
CA	42.165	55.779	53.761	19.372	-	
EP	57.608	83.077	76.537	77.327	10.429	-

$\Delta X^2_{(1)} > 3.841$, $p < .05$, $\Delta X^2_{(1)} > 6.635$, $p < .01$, $\Delta X^2_{(1)} > 10.828$, $p < .001$

6.2 Structural Model

After the validation of the measurement model, the structural model needs to be estimated in order to test the theoretical relationships among the constructs.

6.2.1 Hypotheses Testing

To simplify the structural equation model and meet the SEM assumption of the ratio between sample size and the number of variables, all theoretical constructs in the study need to be transformed from second-order factors to single-order factors for further hypotheses testing (Cavusgil and Zou, 1994; MacCallum et al., 1999; Morgan et al., 2004). Since the CFA results provide support for the unidimensionality of each factor, a composite score is then calculated to represent each factor by averaging across the scale items loaded on the corresponding factor (Morgan et al., 2004; Bandalos and Finney, 2009; Leonidas et al., 2011).

The structural model in the study represents the theoretical relationships, including three exogenous constructs and three endogenous constructs. Three exogenous constructs consist of tangible export market-based assets (TA), relational export market-based assets (RA), and intellectual export market-based assets (IA). Three endogenous constructs consist of export market-based capabilities (MC), export competitive advantage (CA), and export performance (EP). The purpose of the structural model is to test the underlying hypotheses in the study. As presented in Table 6.4, these hypotheses are presented in ten paths to determine the relationship between the constructs under consideration. These ten hypotheses are then classified

into two parts based on the proposed theoretical framework discussed in Chapter Three.

Table 6.4: Underlying Hypotheses

Hypotheses Testing - Part I			
	Path		**Hypotheses**
H1	TA→ CA		There will be a positive relationship between tangible export market-based assets and export competitive advantage.
H2	RA → CA		There will be a positive relationship between relational export market-based assets and export competitive advantage.
H3	IA → CA		There will be a positive relationship between intellectual export market-based assets and export competitive advantage.
H4	MC → CA		There will be a positive relationship between export market-based capabilities and export competitive advantage.
H5	TA → MC		There will be a positive relationship between tangible export market-based assets and export market-base capabilities.
H6	RA → MC		There will be a positive relationship between relational export market-based assets and export market-based capabilities.
H7	IA → MC		There will be a positive relationship between intellectual export market-based assets and export market-based capabilities.
H10	CA → EP		There will be a positive relationship between export competitive advantage and export performance.
Hypotheses Testing - Part II			
	Moderated path	**Moderator**	**Hypotheses**
H8	TA → MC	RA	The effect of tangible export market-based assets on export market-based capabilities is higher for export firms that have high relational export market-based assets than for export firms that have low relational export market-based assets.
H9	TA → MC	IA	The effect of tangible export market-based assets on export market-based capabilities is higher for export firms that have high intellectual export market-based assets than for export firms that have low intellectual export market-based assets.

TA = Tangible export market-based assets, RA= Relational export market-based assets, IA = Intellectual export market-based assets, MC= Export market-based capabilities, CA = Export competitive advantage, EP = Export performance

Hypotheses Testing - Part I

Hypotheses testing in part one is conducted by the hypothesised structural model, which specifies eight relationships in Table 6.4. The results from the baseline SEM model reveal that the structural model yields a marginal fit ($X^2_{(93)}$ = 359.28, X^2/df = 3.86, GFI = .87, CFI = .93, NFI = .90, RMSEA = .095, SRMR = .045) with high factor loadings (>.50) and t-values (>1.96). To improve the model's performance, the modification indices are examined, which suggest that error terms e1 and e14 (scale of operation and economic performance), error terms e11 and e14 (cost advantage and economic performance), and error terms e12 and e16 (product advantage and end-user performance) should be correlated to achieve a good fit ($X^2_{(90)}$ = 258.49, X^2/df = 2.87, GFI = .91, CFI = .95, NFI = .93, RMSEA = .077, SRMR = .038).

The error terms associated with these latent variables indicate that the portion of these variables cannot be explained in the equation (Tabachnick and Fidell, 2007; Byrne, 2010). These variables are not the same in content, but are possibly connected through a cause and effect relationship. According to the strategic management and marketing literature, there is a magnitude of empirical evidence for the relationships between scale of operation and financial performance (Piercy et al., 1998; Serrasqueiro and Nunes, 2008), cost advantage and financial performance (Piercy et al., 1998; Zou et al., 2003), and product advantage and end-user performance (Langerak et al., 2004; Smith and Wright, 2004). These substantiate the rationale for the inclusion of the error covariance. The structural model with standardised path coefficients is shown in Figure 6.8. For clarity purpose, covariances are not shown.

Figure 6.8: Hypothesised Structural Model

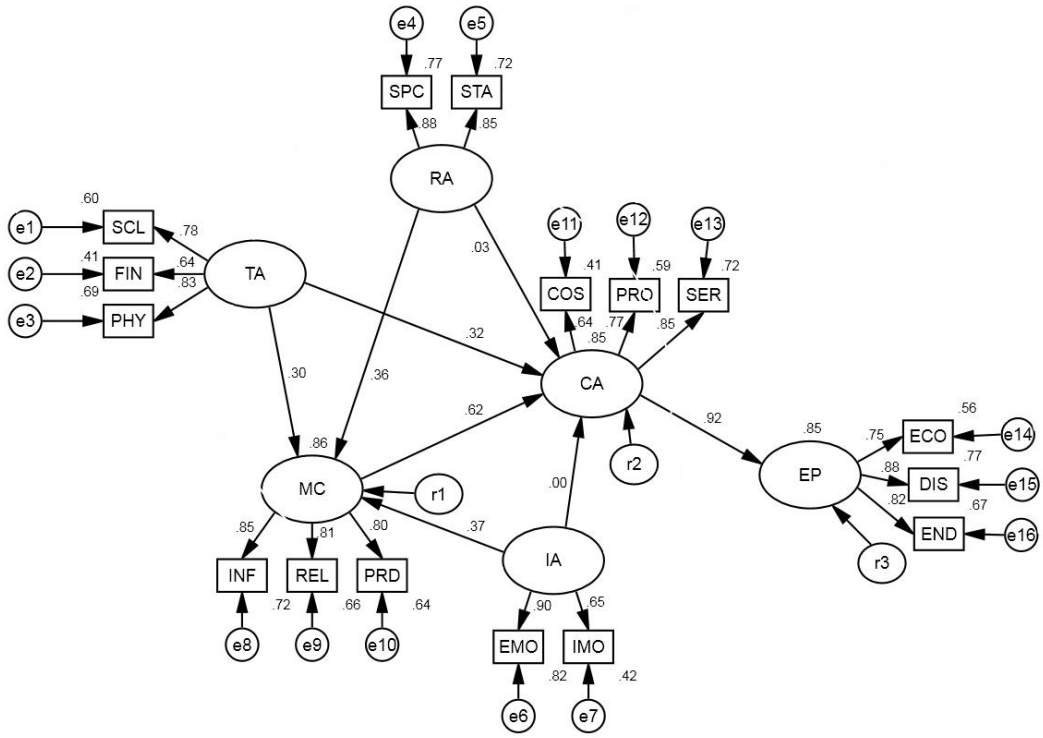

TA = Tangible export market-based assets, RA= Relational export market-based assets, IA = Intellectual export market-based assets, MC= Export market-based capabilities, CA = Export competitive advantage, EP = Export performance

SCL = Scale of operation, FIN = Financial assets, PHY = Physical assets, SPC = Supply chain assets, STA = Strategic alliance assets, EMO = External market orientation, IMO = Internal market orientation, INF = Informational capabilities, REL = Relationship building capabilities, PRD = Product development capabilities, COS = Cost advantage, PRO = Product advantage, SER = Service advantage, ECO = Economic performance, DIS = Distributor performance, END = End-user performance

The SEM results represented in Table 6.5 indicate that the hypotheses H1, H4, H5, H6, H7, and H10 are supported. The standardised estimates for these hypotheses are all statistically significant (β = .32; p<.05, .62; p<.01, .30; p<.05, .36; p<.05, .37; p<.01, and .92; p<.01, respectively). However, hypotheses H2 and H3 are not supported because the standardised estimates of these hypotheses are insignificant (β = .03; p>.05 and .00; p>.05, respectively).

Table 6.5: Hypotheses Testing – Part I

	Path	Standardised Coefficient	t-value	Test result
H1	TA → CA	.32	2.45*	Supported
H2	RA → CA	.03	0.22	Not Supported
H3	IA → CA	.00	-0.01	Not Supported
H4	MC → CA	.62	3.90**	Supported
H5	TA → MC	.30	2.49*	Supported
H6	RA → MC	.36	2.42*	Supported
H7	IA → MC	.37	5.07**	Supported
H10	CA → EP	.92	12.22**	Supported

* p<.05, ** p<.01

TA = Tangible export market-based assets, RA= Relational export market-based assets, IA = Intellectual export market-based assets, MC= Export market-based capabilities, CA = Export competitive advantage, EP = Export performance

Overall, the structural model exhibits excellent explanatory power. The model explains 86% of the variance in export market-based capabilities (MC), 85% of the variance in export competitive advantage (CA), and 85% of the variance in export performance (EP).

Hypotheses Testing – Part II

Hypotheses testing in part two is conducted by multiple-group SEM, which examines two moderated paths in Table 6.4. To investigate these moderating effects, the total sample is divided into high and low groups according to cluster analyses of relational export market-based assets (RA) and intellectual export market-based assets (IA). As a result, one group of moderators constitutes the study subjects scoring high on respective variables, while the other consists of those subjects scoring low. The results of cluster analysis are illustrated in Table 6.6. The first cluster analysis indicates that the ‘High RA’ group exhibits a higher degree of relational export market-based assets compared to the ‘Low RA' group in terms of supply chain assets (SPC) and strategic alliance assets (STA). The second cluster analysis indicates that the ‘High IA’ group

exhibits a higher degree of intellectual export market-based assets compared to the 'Low IA' group in terms of external market orientation (EMO) and internal market orientation (IMO).

Then, the chi-square difference test is conducted on high and low groups in a two-step approach as suggested by Morgan et al. (2004), Zhao and Cavusgil (2006), and Hair et al. (2010). First, the appropriate structural parameters are constrained to be equal across groups, thereby generating an estimated covariance matrix of each group and an overall X^2 value. Second, the parameter equality constraints are removed, resulting in a second X^2 value with fewer degrees of freedom. The moderator effects are tested by assessing whether statistical differences exist between the two X^2 values. If the decrease in the X^2 value is statistically significant ($\Delta X^2_{(1)} > 3.84$; $p<.05$), a moderator effect is indicated.

Table 6.6: Cluster Analysis

Relational Export Market-Based Assets (RA)		
Variables	**High RA (N = 179)**	**Low RA (N = 141)**
Supply Chain Assets (SPC)	Mean = 5.21	Mean = 3.46
Strategic Alliance Assets (STA)	Mean = 5.09	Mean = 3.59
Intellectual Export Market-Based Assets (IA)		
Variables	**High IA (N = 164)**	**Low IA (N = 156)**
External Market Orientation (EMO)	Mean = 5.35	Mean = 3.86
Internal Market Orientation (IMO)	Mean = 5.26	Mean = 4.01

The results of the chi-square difference test are represented in Table 6.7. The difference in X^2 between models with moderator parameters constrained and freed indicates that the hypotheses H8 and H9 are not supported ($\Delta X^2_{(1)} = 0.44$; $p>.05$ and 1.14; $p>.05$, respectively).

Table 6.7: Hypotheses Testing – Part II

	Moderated path	Moderator	Constrained model	Freed model	ΔX^2	Test result
H8	TA → MC	RA	$X^2_{(181)} = 343.50$	$X^2_{(180)} = 343.06$	0.44	Not Supported
H9	TA → MC	IA	$X^2_{(181)} = 355.64$	$X^2_{(180)} = 354.50$	1.14	Not Supported

TA = Tangible export market-based assets, RA= Relational export market-based assets, IA = Intellectual export market-based assets, MC= Export market-based capabilities

6.2.2 Comparison of Alternative Models

Structural equation modeling (SEM) is a useful method to compare different plausible models that are nested in one another and can be justified theoretically (Kline, 2010). First, the original model is revised by deleting the non-significant paths, thus allowing the most parsimonious underlying model to be defined. The goodness-of-fit indices indicates that the modified model provides a better fit to the data ($X^2_{(92)} = 258.54$, $X^2/df = 2.81$, GFI = .91, CFI =.94, NFI = .93, RMSEA =.075, SRMR = .038) in terms of X^2/df, CFI, and RMSEA Indices (See Figure 6.8). The modified model exhibits better explanatory power. The model explains 86% of the variance in export market-based capabilities (MC), 86% of the variance in export competitive advantage (CA), and 85% of the variance in export performance (EP).

Figure 6.9: Modified Structural Model

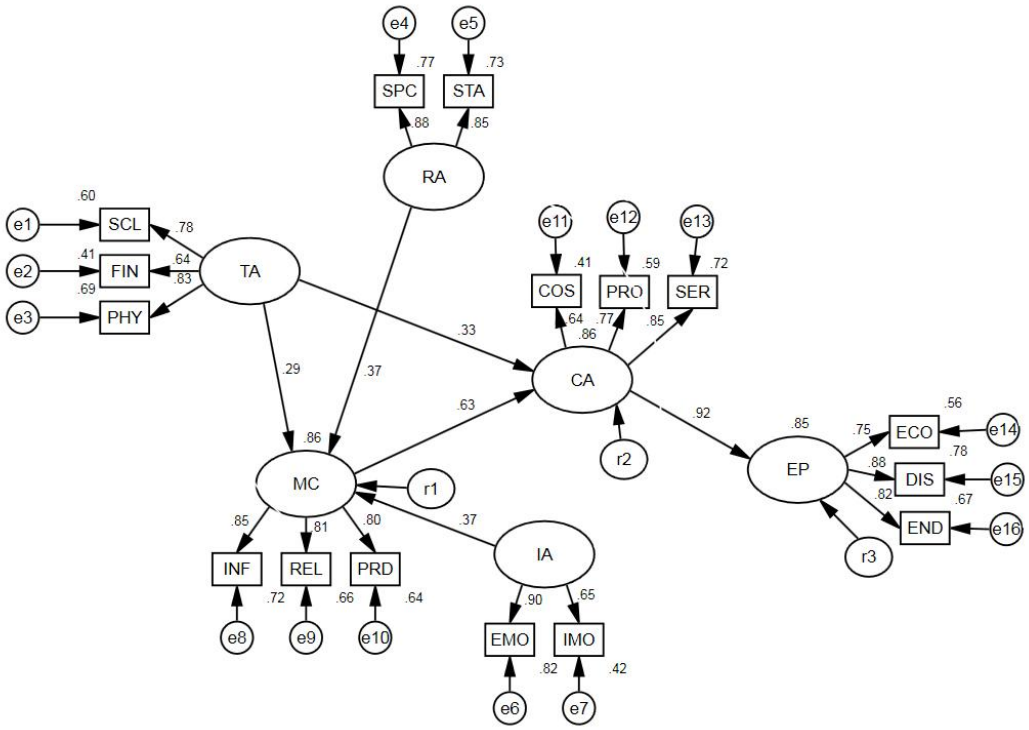

TA = Tangible export market-based assets, RA= Relational export market-based assets, IA = Intellectual export market-based assets, MC= Export market-based capabilities, CA = Export competitive advantage, EP = Export performance

SCL = Scale of operation, FIN = Financial assets, PHY = Physical assets, SPC = Supply chain assets, STA = Strategic alliance assets, EMO = External market orientation, IMO = Internal market orientation, INF = Informational capabilities, REL = Relationship building capabilities, PRD = Product development capabilities, COS = Cost advantage, PRO = Product advantage, SER = Service advantage, ECO = Economic performance, DIS = Distributor performance, END = End-user performance

Second, the study has developed a few alternative models for comparison. The alternative models were developed to examine the existence of a mediation effect on the corresponding relationships (Wang et al., 2005; James et al., 2006). The examination of a mediation effect can explain how a given relationship occurs (Cohen and Cohen, 1983; Iacobucci et al., 2007; Kline, 2010; Zhao et al., 2010). Therefore, two alternative models have been developed for the significance of the incremental increase in model fit due to an additional link postulated, and then compared to the modified model in Figure 6.9 (Model A). The first alternative model (Model B) was

developed, presuming that export market-based capabilities (MC) have a direct impact on export performance (EP). This helps confirm if export market-based capabilities (MC) has direct impact on export performance (EP), or if such an effect mediates through export competitive advantage (CA). The second alternative model is Model C, postulating that tangible export market-based assets (TA) have a direct impact on export performance (EP). This helps confirm if tangible export market-based assets (TA) has direct impact on export performance (EP), or if such an effect mediates through export competitive advantage (CA).

Table 6.8: Model Comparison

	Model A Modified model	**Model B** Model with MC → EP added	**Model C** Model with TA → EP added
X^2	258.54	258.38	258.17
df	92	91	91
X^2/df	2.81	2.84	2.84
GFI	.91	.91	.91
CFI	.94	.95	.95
NFI	.93	.93	.93
RMSEA	.075	.076	.076
SRMR	.038	.038	.038
ΔX^2	-	.16	.37
Standardised estimate of additional path	-	.06	.07
t-value of additional path	-	.41	.63

TA = Tangible export market-based assets, MC= Export market-based capabilities, EP = Export performance

The SEM results are shown in Table 6.8. The two alternative models, Model B and Model C, were good fit models. However, compared with Model A ($X^2_{(92)}$ = 258.54), the X^2 value of Model B ($X^2_{(91)}$ = 258.38) is almost the same. The change in X^2 value is only .16, which is insignificant at p = .05 ($\Delta X^2_{(1)} < 3.841$). The path coefficient from export market-based capabilities (MC) to export performance (EP) is insignificant (β = .06; p>.05). Thus, Model A is more parsimonious and more preferable. Model B was rejected, providing evidence that export market-based

capabilities (MC) have an effect on export performance (EP) mediating through export competitive advantage (CA). Likewise, the X^2 difference between Model A and Model C ($X^2_{(91)}$ = 258.17) is insignificant at p = .05 ($\Delta X^2_{(1)}$ = 0.35). The path coefficient from tangible export market-based assets (TA) to export performance (EP) is insignificant (β = .07; p>.05). This confirms that tangible export market-based assets (TA) do not have a direct influence on export performance (EP). Instead, such an effect mediates through export competitive advantage (CA). In conclusion, all statistical indices represented in Table 6.8 supports the view that the modified model (Model A) in Figure 6.8 is the best fit model among the other alternative models. Table 6.9 shows the standardised coefficients of the modified structural model.

Table 6.9: Modified Structural Model

Path in the Structural Model	Standardised Coefficient	t-value
TA → CA	.33	3.89**
MC → CA	.63	6.74**
TA → MC	.29	2.47*
RA → MC	.37	2.49*
IA → MC	.37	4.90**
CA → EP	.92	12.06**

* p<.05, ** p<.01

TA = Tangible export market-based assets, RA= Relational export market-based assets, IA = Intellectual export market-based assets, MC= Export market-based capabilities, CA = Export competitive advantage, EP = Export performance

6.2.3 Direct, Indirect, and Total Effects

One important advantage of structural equation modeling (SEM) is that it allows researchers to go beyond simply examining the direct effects between the constructs of the model. Taking a more comprehensive view, one can examine the direct and indirect effects simultaneously, allowing not only an analysis of the total influences of each construct but also a comparison of the relative strength of these influences in the model (Sobel, 1987; Cheung and Lau, 2008; Steenkamp and Baumgartner, 2000). Indirect effects are effects mediated through intervening variables. Although these were not hypothesised and tested explicitly, they offer important theoretical and managerial implications (Baumgartner and Homburg, 1996; Kline, 2010).

Table 6.10: Direct, Indirect, and Total Effects on Export Performance

Construct	Direct Effect	Indirect Effect	Total Effect
TA	-	.48	.48
RA	-	.21	.21
IA	-	.22	.22
MC	-	.58	.58
CA	.92	-	.92

TA = Tangible export market-based assets, RA= Relational export market-based assets, IA = Intellectual export market-based assets, MC= Export market-based capabilities, CA = Export competitive advantage, EP = Export performance

Table 6.10 reveals the standardised direct, indirect, and total effects all theoretical constructs have on export performance in the modified structural model (See Figure 6.8 and Table 6.9). The SEM results with number of bootstrap sample 1000, BC confidence 95, and bootstrap ML (Cheung and Lau, 2008) are illustrated as follows. First, the model succeeded in explaining 85% of the variance in export performance, which is certainly high. Second, export competitive advantage remains the dominating effect among all other constructs. Consistent with the RBV theory, the SEM results support the role of competitive advantage as the direct antecedent of export

performance, and the role of export marketing resources as the indirect antecedents of export performance. Third, all theoretical constructs in the model play a significant role in export performance. Export competitive advantage (.92) has the highest effect on export performance, followed by export market-based capabilities (.58), tangible export market-based assets (.48), intellectual export market-based assets (.22), and relational export market-based assets (.21). The results of the study emphasise the need for the firm to focus on acquiring and deploying export marketing resources (export market-based assets and capabilities) in order to gain export competitive advantage and thereby achieve superior export performance.

6.3 Chapter Summary

Structural equation modeling (SEM) was used to test whether the data obtained fit with a proposed theoretical framework. The SEM was conducted in two stages: the measurement model and the structural model. In the first stage, the fit of each measurement model was assessed by using a confirmatory factor analysis (CFA) to ensure that each one was unidimensional. Eight measurement models provided adequate fit to the data, all indicators loaded highly on their specified factors, and the theoretical constructs showed strong evidence of reliability and validity. After that, the hypothesised structural model was tested in the second stage, and six of the hypotheses were supported (See Table 6.1). Furthermore, the modified structural model has also been presented, with the comparison of alternative models and the examination of direct, indirect, and total effects on export performance.

Table 6.11: Results of Hypotheses Testing

	Hypotheses	Test result
H1	There will be a positive relationship between tangible export market-based assets and export competitive advantage.	Supported
H2	There will be a positive relationship between relational export market-based assets and export competitive advantage.	Not Supported
H3	There will be a positive relationship between intellectual export market-based assets and export competitive advantage.	Not Supported
H4	There will be a positive relationship between export market-based capabilities and export competitive advantage.	Supported
H5	There will be a positive relationship between tangible export market-based assets and export market-base capabilities.	Supported
H6	There will be a positive relationship between relational export market-based assets and export market-based capabilities.	Supported
H7	There will be a positive relationship between intellectual export market-based assets and export market-based capabilities.	Supported
H8	The effect of tangible export market-based assets on export market-based capabilities is higher for export firms that have high relational export market-based assets than for export firms that have low relational export market-based assets.	Not Supported
H9	The effect of tangible export market-based assets on export market-based capabilities is higher for export firms that have high intellectual export market-based assets than for export firms that have low intellectual export market-based assets.	Not Supported
H10	There will be a positive relationship between export competitive advantage and export performance.	Supported

CHAPTER 7: DISCUSSION

This chapter is organised into two sections. The first section provides a detailed discussion of the research results, and the second section illustrates the EMRs framework, which encapsulates the findings of the study. Figure 7.1 shows the outline of the chapter.

Figure 7.1: Outline of Thesis Structure

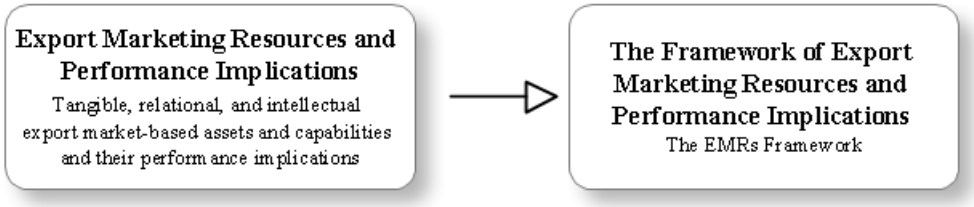

7.1 Export Marketing Resources and Performance Implications

The aim of the study is to enhance our understanding of how firms compete in the export markets. Competitive strategies are approached from the resource-based view of the firm (RBV), which is the dominant paradigm in strategic management and has received considerable attention in the export marketing literature (Piercy et al., 1998; Zou et al., 2003; Morgan et al., 2004; Kaleka, 2011).

The study comprises theoretical and empirical sections. The purpose of the theoretical section is to anchor the study in the research traditions within the field and to provide reasons for adopting the RBV as a theoretical starting point in advancing export marketing theory and practice. Based on the extant literature review and theoretical discussions, a conceptual framework of export marketing resources and their

performance implications is proposed. The specific objectives of the empirical section are: (1) to examine the direct effect of tangible and intangible (relational and intellectual) export market-based assets on export market-based capabilities and export competitive advantage, (2) to examine the moderating influence of intangible (relational and intellectual) export market-based assets on the relationship between tangible export market-based assets and export market-based capabilities, (3) to examine the direct effect of export market-based capabilities on export competitive advantage, and (4) to examine the direct effect of export competitive advantage on export performance. The interrelationships between these theoretical constructs are modelled by applying structural equation modeling (SEM) technique, and a link between export marketing resources, competitive advantage, and export performance is identified.

Therefore, the study contributes to our understanding of tangible export market-based assets, relational export market-based assets, intellectual export market-based assets, and export market-based capabilities. It appears that no published work has been done so far in regards to how these export marketing resources influence each other to achieve competitive advantage and superior performance. The study takes into account the process of resource deployment in realising the value of export marketing resources to explain export performance. The development and testing of the research framework begins to draw together literature that has been diffused to date.

7.1.1 Tangible Export Market-Based Assets and Performance Implications

Tangible assets include factors containing financial and physical values, which can be observed in nature, have physical properties, are owned and controlled by the firm, and contain an accounting value as recorded on the firm's financial statements (Srivastava et al., 1998; Fahy and Smithee, 1999). The empirical results of the study reveal that tangible export market-based assets including scale of operation, financial, and physical assets is positively and significantly influence competitive advantage in export markets. Thus, these tangible assets are crucial resources and contribute to export competitive advantage related to cost, product, and service, which in turn help firms achieve superior export performance (H1 and H10). The result is in line with the arguments advanced by Hunt and Morgan (1995), Srivastava et al. (1998), Fahy and Smithee (1999), and Barney and Clark (2007), as well as the empirical findings of Piercy et al. (1998) and Morgan et al. (2004). Firms that are able to generate high value-in-use of scale of operation, financial, and physical assets can leverage such assets for competitive advantage, while creating barriers to duplicate (Collis and Montgomery, 1995; Srivastava et al., 1998; Lippman and Rumelt, 2003).

Furthermore, the RBV theory states that firms' assets are also the source of capabilities, and capabilities are the main source of their competitive advantage (Grant, 1991; Teece et al., 1997). The results of the study also reveal that tangible export market-based assets can contribute to firms' competitive advantage by giving rise to export market-based capabilities (H4 and H5). The findings are in line with

what has been indicated in previous empirical studies (e.g., Piercy et al., 1998; Morgan et al., 2004).

Even though the influence of firm size on export performance has been extensively analysed by a number of scholars in their empirical studies, the results are ambiguous and inconclusive (Cavusgil and Zou, 1994, Sousa, 2008). An explanation of these results is that firm size, to some extent, may act as a substitute for greater availability of tangible assets. Thus, they do not directly affect export performance, but indirectly contribute to the performance of the firm. In fact, this type of resource is not commonly emphasised in relation to firm growth/performance in empirical RBV research, and many scholars have suggested the need to explore the possibility of harvesting the firm's tangible assets (e.g., Foss, 1997; Andersen and Kheam, 1998; Galbreath, 2005). The results of the study address this gap in the literature by emphasising the crucial role of tangible export market-based assets in building both export market-based capabilities (i.e., informational, relationship building, and products development capabilities) and export competitive advantage. They are among the key sources of competitive superiority in the context of manufacturing export firm.

7.1.2 Relational Export Market-Based Assets and Performance Implications

Relational export market-based assets are defined as the bonds between the export firm and external stakeholders. These relationships enable firms to add value to their business activities and processes (Johnson and Raven, 1996; Gulati et al., 2000; Srivastava et al., 2001; Fang et al., 2008; Matanda and Freeman, 2009). The results of the study reveal that relational export market-based assets, including supply chain and strategic alliances, have no direct relationship with competitive advantage (H2), but relational export market-based assets can contribute to firms' competitive advantage by giving rise to export market-based capabilities (H4 and H6).

Although empirical studies in the export literature indicate a variety of determinant factors of export performance including external and internal factors, among the firm's internal factors, relational export market-based assets have yet to been fully explored (e.g., Aaby and Slater, 1989; Cavusgil and Zou, 1994; Zou and Stan, 1998; Katsikeas et al., 2000; Leonidou et al., 2002; Sousa, 2008). It appears that the concept of relational export market-based assets including supply chain and strategic alliance assets has never been used in any empirical study before in the export context.

This study provides the first body of evidence that relational export market-based assets indirectly influence export performance through export market-based capabilities and then export competitive advantage. Theoretically, these findings are supported by Srivastava et al. (1998) who argued that without relationships with external entities such as channels, suppliers, and other strategic partners, market-

based capabilities in organisational processes cannot be created or leveraged. It also provides empirical support for the arguments expressed by Teece et al. (1997) that supply chain and strategic partners are part of the firm's asset position that shapes the organisational processes contributing to its competitiveness. Johnanson and Vahlne (2006) acknowledged the influences of these relational assets and have extended their internationalisation theory to include the interplay between supply chain and business partners and the opportunities that are likely to develop as a result of these interactions. The study therefore provides a clear picture of how export firms can gain benefits from relational export market-based assets. It is an important contribution to the export literature.

7.1.3 Intellectual Export Market-Based Assets and Performance Implications

Intellectual export market-based assets can be defined as the knowledge about internal and external market environments which reside within the export firm. Intellectual market-based assets include many classes and types of knowledge about both external and internal environments, and know-how embedded in the individuals and processes of the firm, which is crucial for the development of customer knowledge (Srivastava et al., 2001; Lings, 2004; Lings and Greenley, 2005; Zerbini et al., 2007). The study reveals that intellectual export market-based assets, including external and internal market orientation, have no direct relationship with competitive advantage (H3), but these intellectual assets can contribute to firm's competitive advantage by giving rise to export market-based capabilities (H4 and H7).

Prior research has generally supported the impact of intellectual market-based assets (i.e., external and internal market orientation) on performance (Cadogan et al., 1999; Rose and Shoham, 2002; Cadogan et al., 2003; Cadogan and Cui, 2004; Murray et al., 2007) and competitive advantage (Akimova, 2000, Langerak, 2003; Lings and Greenley, 2005). However, the knowledge pertaining to how intellectual market-based assets as an input in the process of building market-based capabilities is considerably limited. Given the critical role of capabilities in the literature, it is worth expecting the association between intellectual market-based assets and capabilities (Grant, 1991; Srivastava et al., 1998; Srivastava et al., 2001).

Morgan et al. (2004), Gounaris (2006), and Murray et al. (2011) also supported this view and highlighted the important role of intellectual export market-based assets as inputs to export market-based capabilities. For example, intellectual export market-based assets can be leveraged with complementary product development capabilities to create superior value offerings for the export markets. Hence, the results of the study fill this gap in the literature and offer empirical evidence that these intellectual market-based assets are essential sources of market-based capabilities. In other words, intellectual export market-based assets, in terms of the combination between external and internal market orientation, can contribute to competitive advantage through the development of export market-based capabilities. This is new found knowledge. To build an extensive view of a firm's business milieu, improve its coordination toward achieving market objectives, and enable the development of marketing capabilities, management needs to understand the knowledge mechanism residing within the external and internal organisational environments (Srivastava et al., 2001; Gounaris, 2006).

7.1.4 Export Market-Based Capabilities and Performance Implications

The results of the study reveals that developing export market-based capabilities, which are the combination of informational, relationship building, and product development capabilities, is an important way to handle the rapidly changing market environments and create competitive advantage through decreasing costs, developing better products, and providing a better service to customers in the export markets (H4). The findings are supported by Grant (1991) who argued that capabilities are important because they are the main source of firm's competitive advantage, and the empirical results of the study are in line with what has been indicated in previous empirical studies (e.g., Morgan et al., 2004).

Although the literature shows that relational and intellectual market-based assets may be required to invigorate and unleash the customer value-generating potential embedded in tangible assets in building market-based capabilities (Srivastava et al., 1998; Srivastava et al., 2001), these intangible assets are not established to play a moderating role in the relationship between tangible assets and market-based capabilities (H2 and H3). Rather, the results of the study, along with the existing conceptual literature, suggest that both tangible and intangible (relational and intellectual) market-based assets are in themselves a source of building export market-based capabilities. While export market-based assets are the resource endowments a firm has accumulated (e.g., investment in facilities, relationship with strategic partners, and market knowledge), export market-based capabilities are core marketing processes by which available assets are combined and transformed into value

offerings for the export markets (Morgan et al., 2004; Krasnikov and Jayachandran, 2008; Morgan et al, 2009). Day (1994) called market-based capabilities the glue that brings assets together and enables them to be deployed advantageously in the market. They are intermediate goods used to improve the productivity of firm's assets (Amit and Schoemaker 1993; Becerra, 2009).

Therefore, export market-based capabilities are a key market-relating deployment mechanism. They enable firms to acquire and deploy tangible and intangible market-based assets in ways that match the market conditions in order to gain competitive advantage, and in turn drive their export performance in terms of economic, distributor, and end-user performance. The empirical results confirm this notion and reveal a positive relationship between these theoretical constructs (H4 – H7 and H10), which is in line with the concurrent reasoning among RBV academics (e.g., Day, 1994; Morgan et al., 2004). The framework of export marketing resources and performance implications summarises the results of the study.

7.2 The Framework of Export Marketing Resources and Performance Implications (The EMRs Framework)

Based on the results of the modified structural model from the previous chapter (See Figure 6.8 in Chapter Six), the EMRs framework (the framework of export marketing resources and performance implications), which encapsulates all the interrelationships among the theoretical constructs in the study, has been presented in Figure 7.2. The standpoint of the EMRs framework is that a firm's competitive strategy is based on the deployments of its export marketing resources (export market-based assets and capabilities). Differences in firm success can be explained by differences in these resource deployments.

Figure 7.2: The EMRs Framework

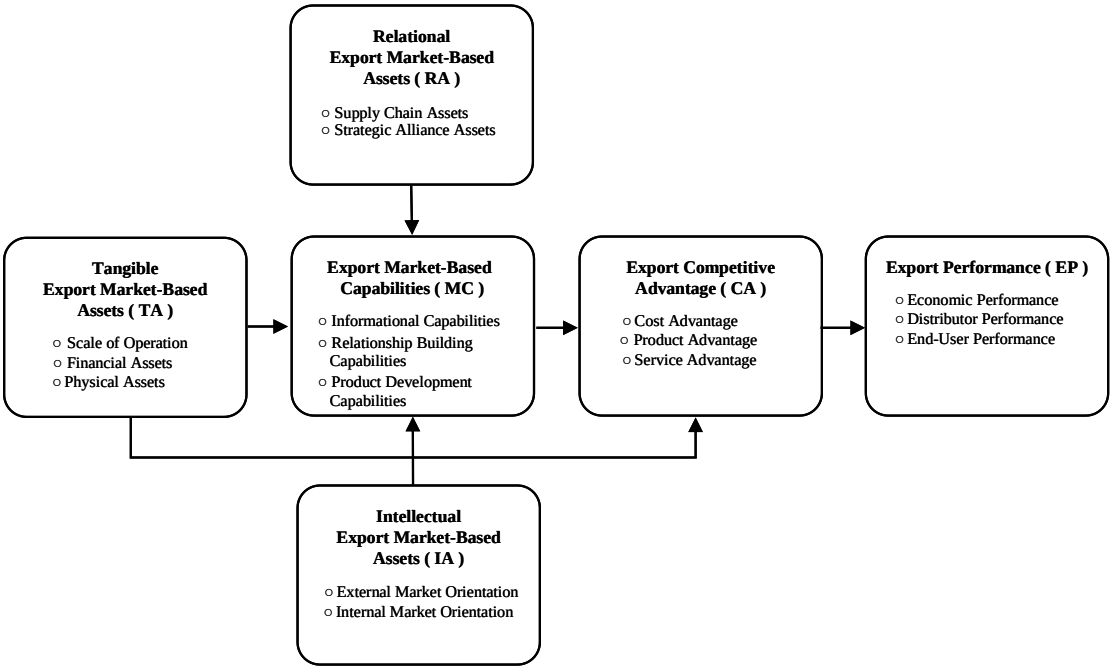

The EMRs framework captures the internal process through which export marketing resources, including tangible and intangible (relational and intellectual) market-based

assets and capabilities, influence performance in the export markets. First, the SEM results indicate that tangible export market-based assets (TA) do not directly affect export performance (EP), but indirectly contribute to the performance of the firm through their impacts on export market-based capabilities (MC) and export competitive advantage (CA). The results emphasise the significance of these tangible assets, and the role they play in the context of manufacturing export firms. The competitiveness of a manufacturing firm depends on its ability to secure tangible export market-based assets in terms of scale of operation, financial, and physical assets.

Second, the effects of relational export market-based assets (RA) and intellectual export market-based assets (IA) on export performance (EP) are mediated by export market-based capabilities (MC) and competitive advantage (CA), whereas the effects of export market-based capabilities (MC) on export performance (EP) are mediated by export competitive advantage (CA). The results reveal that export market-based capabilities are fundamental to firm success in the competitive export markets. Informational, relationship building, and product development capabilities are the key marketing processes through which tangible and intangible market-based assets are combined and transformed into value offerings, resulting in firms' competitive advantage in the export markets. These market-based capabilities blend the firm-level assets and enable their effective deployment (Day, 1994; Srivastava et al., 2001).

In addition, the results of the study indicate that capabilities differ from intangible assets in that export market-based capabilities enable firms to create competitive advantage by boosting the productivity of their relational export market-based assets

(i.e., supply chain and strategic alliance assets) and intellectual export market-based assets (i.e., external and internal market orientation). In other words, it is not enough for a firm to possess these relational and intellectual assets; it must be able to use these intangible assets effectively. This in turn requires organisational processes to build new kinds of combinations from these resources, which can then be reflected in informational, relationship building, and product development capabilities. These capabilities highlight the crucial role of marketing and strategic management in adaptation, integration and recreating an organisation's inner and outer skills, resources and competition factors, so that they would better fit the requirements of a changing business environment (Day, 1994; Sapienza et al., 2006; Ambrosini and Bowman, 2009).

Finally, export competitive advantage (CA) has a direct influence on export performance (EP), which is in line with the central theme of the RBV theory. Cost, product, and service advantage plays a significant mediating role in the resources - performance relationship. This results in superior economic, distributor, and end-user performance. The rationale of the RBV is the focus on the firm and on the need the firm has to develop and to combine resources to achieve competitive advantage, and competitive advantage untimely translates into firm's superior performance (Barney, 1991; Fahy and Smithee, 1999; Morgan et al., 2004; Newbert, 2007; Murray et al., 2011).

The SEM results reveal that the EMRs framework succeeded in explaining 86% of the variance in export market-based capabilities, 86% of the variance in export competitive advantage, and 85% of the variance in export performance. The values

are certainly high in comparison to the findings of Morgan et al. (2004), which noted these values as 31%, 64%, and 76%, respectively. It demonstrates the significant roles played by relational and intellectual market-based assets in the export context. The reconceptualisation of export marketing resources suggested by the present study is therefore found to be beneficial. These export market-based assets and capabilities are important because they are the foundation of competitive advantage which in turn leads to differences in firm's export performance.

Hence, it could be argued that the present study develops a new body of knowledge to explain how the resource-based view of strategy can be applied to exporting studies, an area of export marketing strategies that have received relatively little attention with regard to the creation of competitive advantage from marketing and international business scholars (Morgan et al., 2004; Navarro et al., 2010). The EMRs framework could provide a unique perspective to explain how a firm can harvest greater value from export marketing recourses (export market-based assets and capabilities) it possesses, when exporting to foreign markets.

7.3 Chapter Summary

The export performance literature has had a relatively poor record of using robust theoretical frameworks to underpin empirical studies (Styles et al., 2008; Navarro et al., 2010). Therefore, the focus on competitive strategies through the application of the RBV theory should provide theoretical insights as well as empirical evidence as to which assets and capabilities are required to achieve competitive advantage and performance outcomes. The support from this study for the EMRs framework, which represents a holistic view of export marketing resources and their performance implications, has provided further evidence of the usefulness of applying the resource-based view of strategy to the export setting.

The EMRs framework illustrated the internal process through which export marketing resources contribute to export competitive advantage and export performance. The framework revealed that export competitive advantage is an important instrument to achieve high-level export performance. High levels of export competitive advantage are determined by the direct and indirect effects of export market-based assets and capabilities. Export market-based capabilities have the highest effect on the achievement of export competitive advantage, followed by tangible export market-based assets. The rest are intellectual and relational export market-based assets, which solely have an indirect effect on the achievement of export competitive advantage through the development of export market-based capabilities.

CHAPTER 8: CONCLUSION

To conclude the research, this final chapter begins with a summary of the study, followed by the theoretical, managerial, and government policy implications. Finally, the chapter ends with the limitations and directions for further research. Figure 8.1 shows the outline of this chapter.

Figure 8.1: Outline of Thesis Structure

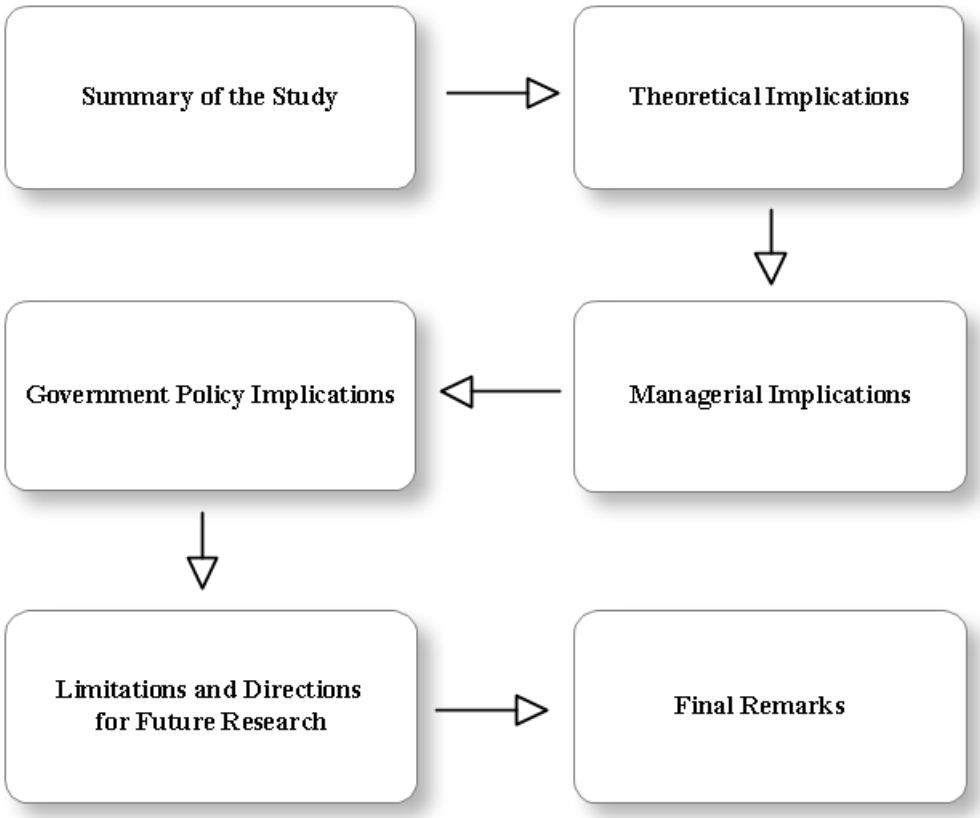

8.1 Summary of the Study

The study represents one of the pioneer attempts to shed light on the performance implications of export marketing resources. The aim of the study is to answer the research question "How do export marketing resources, including tangible and intangible (relational and intellectual) export market-based assets and export market-based capabilities, enable a firm to achieve competitive advantage and superior performance in the export markets?". In doing so, the study developed and empirically tested a conceptual framework of export marketing resources and their performance implications with data collected from 320 manufacturing export firms in Thailand. Structural equation modeling (SEM) was used to examine the interrelationships between these theoretical constructs.

The SEM results confirm the core rationale of the RBV theory and expand our knowledge of export marketing resources. The study provides an empirically tested framework to explain how export marketing resources can be converted into superior export performance by considering the process through which they are deployed. This demonstrates the richness of the resource-based strategy as the basis for assessing the ability of firms to exploit their marketing resources as a route through which they can enhance their competitiveness in the export context.

8.2 Theoretical Implications

Export marketing and export performance research has undergone a remarkable growth in popularity among both academics and practitioners over the past two decades. During this period, several concepts and views have been developed. Generally, these concepts largely depended on the structure-conduct-performance (SCP) paradigm or atheoretical models, which have been particularly unorganised, fragmented, and lacking in terms of theoretical guidance (Zou and Stan, 1998; Styles et al., 2008). Furthermore, a large number of conceptual and empirical studies have been developed to discover the antecedents of export performance. Far less attention has been given to sources of competitive advantage and the meaningful idiosyncratic combinations of export market resources that can be used efficiently and effectively by firms competing in the overseas markets (Morgan et al., 2004). In the export marketing field, the extant knowledge about the determinants of firm's export competitive advantage and their influence on export performance is very scarce (Navarro et al., 2010).

The present study has taken an initial step toward addressing these gaps by applying the resource-based view of the firm (RBV) in advancing export marketing theory and practice. The contributions of this study lies in the formulation of the integrated theoretical framework and its empirical validation. The study introduces a conceptualisation of export marketing resources (export market-based assets and capabilities), and empirically tests the framework comprised of the interrelationships between theses theoretical constructs and their impact on firms' export competitive advantage and export performance. Therefore, the study provides some promising

results that enhance a better understanding of how firms compete in the export markets, and expands the growing body of literature on export marketing and export performance research by adopting a fresh theoretical perspective of the resource-based view of strategy. Four main contributions of the study are outlined below.

First, the main contribution of the study is that it provides the EMRs framework, which is a framework of export marketing resources and performance implications (See Figure 7.1 in Chapter Seven). The study not only consolidates the concept of export marketing resources, but also provides empirical validation for their performance implications. The framework seems to be one of the pioneer efforts that capture the internal process through which export marketing resources, incorporating tangible and intangible (relational and intellectual) export market-based assets and capabilities, influence export performance.

Past RBV research tends to focus on identifying and measuring resources and examining the performance differences between firms, with and without these resource endowments (Newbert, 2007; Sousa, 2008). However, there is limited understanding of how the possession of unique and valuable resources leads to a better performance (Priem and Butler, 2001; Ketchen et al., 2007; Newbert, 2007; Morgan et al., 2009; Kraaijenbrink et al., 2010). Most studies have embraced none and, in some cases, only one mediator in their empirical frameworks, whereas the current research attempts to bridge the gap in the literature by investigating more complicated effects through multiple mediators (e.g., two intermediate mediators). This provides a better understanding of the interdependent and complementary roles

of export marketing resources in delivering competitive advantage and ultimately yielding superior performance.

The SEM results of the study indicate that export marketing resources, competitive advantage, and export performance are related in a theoretically predicted manner, and demonstrate that the EMRs framework succeeded in explaining 85% of the variance in export performance. Consistent with the resource-based logic, the findings of the study support the role of competitive advantage as the direct antecedent of export performance, and the role of export marketing resources (export market-based assets and capabilities) as the indirect antecedents of export performance. More specifically, tangible export market-based assets indirectly contribute to export performance through their impacts on export market-based capabilities and export competitive advantage. The effects of relational and intellectual export market-based assets on export performance are mediated by export market-based capabilities and competitive advantage, whereas the effects of export market-based capabilities on export performance are mediated by export competitive advantage. Therefore, the study demonstrates the applicability of the resource-based strategy in export marketing literature and enhances understanding of how key idiosyncratic resources of the firm combine together to shape competitive advantage and export performance in the overseas markets. This makes an important contribution to theory development in relation to export performance.

Moreover, distinguishing between these tangible assets, intangible (relational and intellectual) assets, and capabilities that firms develop and deploy, as explanations of performance variations, is also an important theoretical distinction in the RBV

research (Newbert, 2007; Morgan et al., 2009; Kraaijenbrink et al., 2010), supported empirically in this study. Hence, the EMRs framework may provide a platform for further RBV research in several areas, such as strategic management, marketing, and international business studies.

This leads to the second important contribution of the study. Specifically, the study provides a theoretical contribution to the body of knowledge by introducing a classification scheme for understanding the ambiguous nature of export marketing resources. This classification is established on the distinction between (1) tangible export market-based assets, (2) relational export market-based assets, (3) intellectual export market-based assets, and (4) export market-based capabilities. Hence, the study contributes to the literature by responding to the calls from previous researchers (e.g., Ling-Yee and Ogunmokun, 2001; Balabanis et al., 2004; Morgan et al., 2004; Navarro et al., 2010; Murray et al., 2011) to explicitly consider a multidimensional perspective underlying export marketing resources. It is important to realise the idiosyncratic nature of export marketing resources. The results of the study suggest that only when all dimensions of export marketing resources are implemented, can firms achieve maximum benefits. Clearly, the study helps to reduce the literature gap by indicating that one dimension of export marketing resources alone cannot guarantee success. For example, firms may understand the needs of customers but fail to gear their production and facilities toward the end. All dimensions ought to be integrated to provide firms with business superiority. The study should provide an initial inspiration to other researchers who are interested in the investigation of whether or not the combination of these marketing resources would be a powerful strategy for firms achieving competitive superiority in different contexts.

The third relates to the role of intangible assets in export performance. The major differences between the multiple dimensions of export marketing resources elaborated in the present study and those previously suggested (e.g., Piercy et al., 1998; Morgan et al., 2004) are relational and intellectual export market-based assets. The study represents one of the first studies to adapt and apply market-based assets framework proposed by Srivastava et al. (2001) into the export marketing literature. This is an important contribution because, although much research in the literature has been done at a conceptual level, empirical studies are generally lacking. The study highlights the unique characteristics of supply chain and strategic alliances as relational export market-based assets and of external and internal market orientation as intellectual export market-based assets and empirically tests these theoretical constructs. Although a comprehensive review of the literature reveals that previous studies have individually focused on either some aspects of these relational or intellectual market-based assets (e.g., Greenley et al., 2005; Morgan et al., 2009; Murray et al., 2011), the integration of these intangible assets seems to have received little attention from researchers, specifically in the context of exporting. The present study therefore provides an empirically tested framework to explain how export firms possessing these intangible assets can leverage competitive advantage through their capabilities to achieve superior performance. It provides an important extension to past research that explored the impact of marketing resources on firm performance in general and export marketing resource on export performance in particular.

Finally, owing to the absence of a comprehensive construct that measures relational and intellectual export market-based assets, the conceptualisation and measurement of these theoretical constructs underpinning the study should provide a foundation for

further analytical and empirical work. It is also worth emphasising that each measurement has a high level of reliability and validity, which is supported by the relatively high explanatory power in the EMRs framework. The results of the study also demonstrate the important roles played by relational and intellectual market-based assets in the export context. This contributes to the body of knowledge in the development of measurement scales of these relational and intellectual assets and enables future research to conduct further empirical tests, based on these theoretical constructs.

8.3 Managerial Implications

The study also makes important contributions to practitioners. The results of the study provide some insights into how managers can build competitive advantage and achieve superior export performance through export marketing resources (export market-based assets and capabilities). The deployments of these marketing resources play an important role in firms' competitive strategies. Firms should therefore build on resources that contribute to their success in the export markets.

The results of the study provide managers with guidance as to which types of export marketing resources firms should focus on in order to improve their competitiveness in foreign markets. They can get a better picture of how firms’ resources can be deployed and how these resources help explain firm success. This is an important managerial implication because international business environments are more turbulent than the domestic markets, and managers in the export context typically have little control over external industry and market factors that may influence export

performance. Hence, they have to compete and enhance performance in the export markets for which they have been responsible, given the assets and capabilities available to them (Spyropoulou et al., 2011). Thus, they can use the EMRs framework as a diagnostic tool to examine which export marketing resources are already in place and which need to be created in order to address environmental challenges.

The EMRs framework emphasises the importance of paying managerial attention to the underlying process through which export marketing resources influence firm success. Resource advantages are not automatically converted to superior performance. In order to harness the potential of these resources, managers should understand the necessary resource combination. Since the process by which competitive advantage develops is crucial in understanding the development of superior performance, managers should therefore monitor this internal process and focus their efforts on developing export competitive advantage through market-based assets and capabilities. For example, relational and intellectual export market-based assets themselves may not help firms attain competitive advantage without managerial efforts in transforming these intangible assets into export market-based capabilities, which are the core export marketing processes in delivering values in terms of lower cost, high quality products, and superior services for overseas customers.

This framework also indicates that the development of export market-based capabilities is the most important instrument in achieving competitive advantage and thus superior return, followed by tangible export market-based assets. The rest are intellectual and relational export market-based assets, which serve as indirect influence on the achievement of export competitive advantage through the

development of export market-based capabilities. The framework should assist managers in manufacturing export firms to consider which export marketing resources they should pay particular attention to, while aiming to succeed in the international market environments. Each of these export marketing resources and their implications are outlined below.

First, tangible export market-based assets, including scale of operation, financial, and physical assets play a role in building export market-based capabilities and export competitive advantage, in the context of manufacturing firms. These tangible assets enable firms to efficiently compete on price, product, and service factors against competitors in foreign markets. To achieve international growth, firms should be able to change and modify their products and services to meet the changing nature of their target export markets. Therefore, tangible export market-based assets should be viewed as productive services, and the continuous availability of these tangible assets serves as the important source of stimulation for firm growth/performance (Penrose, 1959; Becerra, 2009).

Second, relational export market-based assets, including supply chain and strategic alliance assets, are part of a firm's asset position that shapes export market-based capabilities contributing to its competitive advantage. In today's fast paced global competition, the appropriate use of these relational assets enables firms to respond more promptly to market needs by taking advantage of existing networks (Srivastava et al., 2001). The synergistic role of the supply chain and strategic alliance assets is to gain access to shared resources, which in turn improve firms' strategic positions. These relational assets enable firms to learn new skills, gain legitimacy, control

transaction costs, reduce contract cost, and thus add value to business activities and processes (Gulati et al., 2000; Srivastava et al., 2001; Matanda and Freeman, 2009). Besides, the importance of social networks should never be underestimated when firms are seeking international success (Chadee and Zhang, 2000; Gu et al., 2008). They are seen as a good source of useful information and new business opportunities, such as establishing overseas distributors and suppliers. All of these benefits of relational export market-based assets are then reflected in the development of superior market-based capabilities.

Third, intellectual export market-based assets, including external and internal market orientation, are also essential sources of export market-based capabilities. Having knowledge about customers, competitors, changing market trends, and government rules and regulations is necessary for marketing decision-making process (Ashill and Jobber, 2010). An appropriate use of marketing information systems should give all employees the information required to assist them in dealing with overseas customer requests immediately. Firms facing dynamic market forces stand to benefit greatly from adopting market orientation, which is the marketing intelligence embedded in individuals and processes of the firms. Market orientation helps develop and build market-based capabilities, which in turn help firms market the appropriate goods and services that are valued by their customers in the export markets (Murray et al., 2011). Hence, identifying and shaping opportunities requires constant scanning, searching and exploring across markets. These activities involve the understanding of latent demand, the structural evolution of industries and markets, and supplier and competitor responses (Teece et al. 2002; Teece, 2007). Consequently, informational capabilities then enable firms to build an extensive picture of the changing market

environment, sense the opportunities they hold, and take advantage of new opportunities. Furthermore, marketing intelligence also help shape product development and relationship building capabilities, which in turn translate into superior value offerings for customers in the export markets.

Finally, export market-based capabilities, which are the combination of informational, relationship building, and product development capabilities, are the most critical export marketing resources. They are the crucial market-relating deployment mechanisms, enabling firms to acquire and deploy tangible and intangible (relational and intellectual) export market-based assets in ways that match the market conditions in order to add value to their goods and services, take advantage of market opportunities, and overcome competitive threats (Day, 1994; Morgan et al., 2004). Achieving and maintaining competitiveness requires firms to continuously modify their products and services to meet the changing needs of the markets at lower cost compared to their competitors. This competitive advantage ultimately translates into firms' superior performance.

The EMRs framework requires managers to look forward as well. Firms that are fortunate enough to have distinctive resources must also be wise enough to realise that their values are eroded by time and competition (Collis and Montgomery, 1995; Augier and Teece, 2009). Hence, managers, who carry the burden of success or failure of the organisation's direction and future, must continually invest in and upgrade their marketing resources. The knowledge associated with linking firm's assets and capabilities to competitive advantage can help firms leverage existing resource position into superior future position. The EMRs framework therefore can

serve as a useful strategic tool to boost their firms' growth, strengthen their competitive edge, improve their performance, and ensure their survival in a rapidly changing export market.

8.4 Government Policy Implications

Firms' survival and expansion and the consequent economic growth of numerous countries are strongly contingent upon a better comprehension of the determinants that influence their export performance (Sousa et al., 2008). Exporting contributes to the overall economy of a nation in a number of ways, including improvement in the balance of payments and the standard of living, employment, and increased revenues in the form of profits and taxes. It is for these reasons that increasing export activity is a goal of many national governments (Leonidas et al., 2011). Thus, government administrators and public policy makers, who seek to increase the competitiveness of their export industries, can gain some valuable insights from the results of the study.

The study provides some direction for government policy makers on how to help export firms increase their competitive advantage in overseas markets through government schemes and programs, which coalesce to create environments conducive to export firms. The global economic environment is experiencing a high degree of turmoil, including growing liberalisation of trading systems, regional economic integration, and major advances in information, communication, and transportation technologies. These major advances are bringing customers and firms closer together and have made business environments more interconnected, providing firms with increased business opportunities (Peng, 2008, 2009). Despite the availability of global opportunities, the ability for firms to succeed in overseas markets largely rests on their

possession of appropriate assets and capabilities. Hence, the government should set up schemes to decrease unfavourable business conditions faced by firms from the lack of available resources.

An example of these schemes is financial assistance. Financial assistance should be used to help firms acquire tangible export market-based assets (e.g., capital funds, modern technology and equipment). However, financial loans alone might not bring export success. To be competitive and successful in overseas markets, intangible assets and capabilities are crucial. Governments should allocate their budget, not only to provide financial support, but also to provide marketing knowledge and training through national export-promotion programs to broaden firms' intellectual export market-based assets and capabilities. National seminars, workshops, export counselling, and conferences, together with market research about export markets and export newsletters are ways of enhancing knowledge regarding market conditions and customer preferences in foreign markets. Trade shows and trade missions can also allow managers to rapidly acquire knowledge about export markets and the exporting process. In addition, establishing business clusters to create supply chains and alliance networks is another example of a government scheme to promote firms' relational export market-based assets. Government should create a platform where export firms would have the opportunity to interact with foreign businesses to create business partners for export success. Therefore, governments should play a supporting role in facilitating a better firm performance in the export markets.

Governments should also encourage their manufacturing exporters to seek the appropriate government assistance if they lack appropriate export marketing resources,

and firms should take advantage of these schemes and programs for greater export success. Exporters can achieve better results by supplementing their own assets and capabilities with government assistance.

8.5 Limitations and Directions for Future Research

The empirical findings and implications drawn from the study must be interpreted in light of a number of limitations, and future research should be designed to overcome some of these limitations.

First, the EMRs framework is not considered to be exhaustive, but merely as representative of the critical marketing resources that have contributed to firm success in the export markets. Further research could identify and test additional constructs that would more broadly capture the theoretical domain of export marketing resources, such as export entrepreneurship or international entrepreneurship, which is one of the emerging areas of international business research (Knight, 2000).

The RBV underlines the importance of managerial resources, but entrepreneurship has often been excluded within the RBV framework (Alvarez and Busenitz 2001). Incorporating entrepreneurial elements into the framework would certainly provide the opportunity to exploit human resources in a different angle. Alvarez and Busenitz (2001) argued that entrepreneurial abilities, such as entrepreneurial recognition and insight, are themselves valuable resources in their own right. According to the theory of entrepreneurship, Casson (2005) argued that one of the most important forms of entrepreneurial activity is the ability to identify a market-making opportunity, in

particular the identification of changes in demand and creation of a new market to meet needed demands. This entrepreneurial ability is definitely a valuable resource. Similarly, Knight and Cavusgil (2004) suggested that the possession of entrepreneurial orientation, when combined with other resources and skills, would allow firms to see and exploit opportunities in foreign markets. Thus, future research efforts may extend the scope of this study by including export entrepreneurship in the research framework. Nevertheless, in terms of defining entrepreneurship as a valuable resource, there are some theoretical considerations to be made. If entrepreneurship is specifically studied within the RBV framework, it is important to draw a distinction between managerial ability and entrepreneurial ability because both concepts are often needed simultaneously to understand how the bundles of resources are controlled within the firm and how the firm develops (Collis and Montgomery, 1998; Becerra, 2009).

Second, one of the criticisms of the RBV deems that it ignores the context in which firms operate, assuming that the resources - competitive advantage - performance relationship applies universally and is not influenced by contextual factors (Priem and Butler, 2001; Sirmon et al., 2007). Yet, some scholars have noted that when firms expand abroad, they encounter unique national institutional contexts that define 'the rules of the game' for doing business in that particular country (Brouthers et al., 2008; Peng, 2008, Peng et al., 2008). Hence, future research may expand the EMRs framework that takes into account institutional theory (e.g., institutional differences between countries) and tailors the marketing resources - competitive advantage - performance perspective applicable to competitive strategies of export firms. Viewing

the RBV and institutional theory as complementary may expand researchers' ability to explain export performance variations (Peng, 2001, 2009; Gao et al., 2010).

Third, despite the significant results of the study, readers must be cautious in interpreting these results. The cross-sectional design does not capture the dynamic of change in firms' marketing resources. The cross-sectional approach is restricted to those of association (Kline, 2010). Although the framework underpinning the study relies on a strong theoretical foundation and has been conceptualised based on a logical sequence, further examination with different approaches would be worthwhile. Probable causal implication could be strengthened by developing and utilising a time series database in subsequent studies. Although costly and time-consuming, applying longitudinal approaches in future studies are more likely to provide additional insights into the dynamic aspects of firms' marketing resources and the associated performance implications than cross-sectional studies.

Finally, the context in which the study was conducted is relatively limited. The research is restricted to manufacturing export firms in Thailand. Given that manufacturing exporters may operate differently relative to service firms and export firms operating in other countries, it is recommended that the specific feature of the research background should be taken into consideration when interpreting and generalising these results in relation to other exporting milieu. Future research efforts should focus on firms outside the manufacturing sector in order to determine whether the conclusion reached in the study is applicable in the context of other business areas.

8.6 Final Remarks

The traditional concept of strategy was expressed in terms of strengths and weaknesses of a firm (e.g., Ansoff, 1965; Andrews, 1971). This led to the introduction of the well-known SWOT framework – strengths, weaknesses, opportunities, and threats. Underlying the SWOT framework is the concept of viewing competitive strategy as a match between the firm's internal environment (strengths and weaknesses) and external environment (opportunities and threats). Good strategies in this view are those that are explicit and achieve a good fit between the internal and external factors (Hunt, 2000, Becerra, 2009).

Since the development of the SWOT framework, strategic management literature has advanced significantly, and the resource-based view of the firm (RBV) has become a major paradigm in studying modern competitive strategies (Acedo et al., 2006; Newbert, 2007; Kraaijenbrink et al., 2010). The RBV focuses on how firms can achieve competitive advantage through internal resources that enable them to exploit opportunities and neutralise threats in their environments (Barney and Clark, 2007). Thus, the main implications of this perspective in terms of competitive strategies are that, in order to compete, firms need to manage their strategic resources. Firms should build on resources that contribute to their success, and they should establish where resource gaps lie and try to fill these gaps (Collis and Montgomery, 1995, 1998; Barney and Clark, 2007). The focus of firms' attention should shift from building market power to leveraging unique resources that could be employed efficiently and effectively for competing in the competitive market environment.

Despite their important role in competitive advantage creation, there is a general lack of understanding of how the RBV framework can help firms develop competitive strategies in an export context (Peng, 2001; Morgan et al., 2004). Nonetheless, based on the theoretical considerations and the empirical evidence presented in this thesis, it is the researcher's hope that the EMRs framework has contributed meaningfully to the understanding of how firms compete in the export markets. From the resource-based standpoint, the ability of firms to succeed in today's export market environments depends largely on the resources they employ in the exploitation of business opportunities and in neutralising threats. Therefore, the EMRs framework can help to explain how possession of superior export marketing resources (export market-based assets and capabilities) can serve as fundamental advantages to improve firms' export performance.

Increasing competition, globalisation, and fragmentation of markets continue to ask ever greater questions in relation to managerial decision making of export firms (Rialp and Rialp, 2006; Peng, 2008, 2009). In dynamic international business settings, both large and small firms face constant challenges in sustaining long-term superior performance (Augier and Teece, 2009; Teece et al., 2009). As a result, firms that can anticipate and react faster to the changes emerging in their environments have better opportunities to grow and to be profitable than do their slower rivals. In the light of these challenges, investing in export marketing resources should enhance their attempts to achieve a better presence in the global market.

REFERENCES

Aaby, N., & Slater, S. (1989). Managerial Influences on Export Performance: A Review of the Empirical Literature 1978-1988. *International Marketing Review, 6*(4), 7-26.

Abzari, M., Ghorbani, H., & Madani, F. A. (2011). The Effect of Internal Marketing on Organizational Commitment from Market-Orientation Viewpoint in Hotel Industry in Iran. *International Journal of Marketing Studies, 3*(1), 145-155.

Acedo, F. J., Barroso, C., & Galan, J. L. (2006). The Resource-Based Theory: Dissemination and Main Trends. *Strategic Management Journal, 27*(7), 621-636.

Akimova, I. (2000). Development of Market Orientation and Competitiveness of Ukrainian Firms. *European Journal of Marketing, 34*(9/10), 1128-1148.

Aktouf, O., Chenoufi, M., & Holford, W. D. (2005). The False Expectations of Michael Porter's Strategic Management Framework. *Problems and Perspectives in Management, 4*, 181-200.

Allison, P. D. (2002). *Missing Data*. California: Sage Publications.

Alvarez, S. A., & Busenitz, L. W. (2001). The Entrepreneurship of Resource-Based Theory. *Journal of Management, 14*, 33-46.

Alvesson, M., & Deetz, S. (2000). *Doing Critical Management Research*: Sage Publications.

Ambrosini, V., Bowman, C., & Collier, N. (2009). Dynamic Capabilities and Are they a Useful Construct in Strategic Management? *British Journal of Management, 20*, 9-24.

Amit, R., & Schoemaker, P. (1993). Strategic Assets and Organizational Rent. *Strategic Management Journal, 14*(1), 33-46.

Andersen, O., & Kheam, L. S. (1998). Resource-Based Theory and International Growth Strategies: An Exploratory Study. *International Business Review, 7*, 163-184.

Anderson, J. C., & Gerbing, D. W. (1982). Some Methods for Respecifying Measurement Models to Obtain Unidimensional Construct Measurement. *Journal of Marketing Research, 19*, 453-460.

Anderson, J. C., & Gerbing, D. W. (1988). Structural Equation Modeling in Practice: A Review and Recommended Two-Step Approach. *Psychological Bulletin, 103*(3), 411-423.

Andrews, K. R. (1971). *The Concept of Corporate Strategy*. Homewood, IL: Irwin.

Ansoff, H. I. (1965). *Corporate Strategy: An Analytic Approach to Business Policy for Growth and Expansion*. New York: McGraw-Hill.

Arbuckle, J. L. (2009). *AMOS 18.0 User's Guide*. Chicago: SPSS Inc.

Arbuckle, J. L., & Wothke, W. (1999). *AMOS 4.0 User's Guide*. Chicago: Smallwaters Corporation.

Armstrong, J. S., & Overton, T. S. (1977). Estimating Nonresponse Bias in Mail Surveys. *Journal of Marketing Research, 14*(August), 396-402.

Ashill, N., & Jobber, D. (2010). Measuring State, Effect and Response Uncertainty: Theoretical Construct Development and Empirical Validation. *Journal of Management, 36*(4), 1278-1308.

Ashill, N. J., Rod, M., Thirkell, P. C., & Carruthers, J. (2009). Job Resourcefulness, Symptoms of Burnout and Service Recovery Performance: An Examination of Call Centre Frontline Employees. *Journal of Services Marketing, 23*(5), 338-350.

Atuahene-Gima, K. (1995a). An Exploratory Analysis of the Impact of Market Orientation on New Product Performance: A Contingency Approach. *Journal of Product Innovation Management, 12*(4), 275-293.

Atuahene-Gima, K. (1995b). The Influence of New Product Factors on Export Propensity and Performance: An Empirical Analysis. *Journal of International Marketing, 3*(2), 11-28.

Atuahene-Gima, K. (1996). Market Orientation and Innovation. *Journal of Business Research, 35*(2), 95-103.

Atuahene-Gima, K., Slater, S. F., & Olson, E. M. (2005). The Contingent Value of Responsive and Proactive Market Orientation for New Product Program Performance. *The Journal of Product Innovation Management, 22*, 464-482.

Augier, M., & Teece, D. J. (2009). Dynamic Capabilities and the Role of Manager. *Organizational Science, 20*(2), 410-421.

Avlonitis, G. J., & Gounaris, S. P. (1997). Marketing Orientation and Company Performance: A Comparative Study of Industrial vs. Consumer Goods Companies. *Industrial Marketing Management, 26*(5), 384-402.

Axinn, C., Noordewier, T., & Sinkula, J. (1996). Export Strategies and Export Performance: An Empirical Investigation of a Product/Markets Typology. *Advances in International Marketing, 8*, 27-58.

Bachmann, D., Elfrink, J., & Vazzana, G. (2000). E-Mail Vs. Snail Mail Face off in Rematch. *Marketing Research, 11*(4), 10-15.

Bagozzi, R. P., & Phillips, L. W. (1991). Assessing Construct Validity in Organizational Research. *Administrative Science Quarterly, 36*, 421-458.

Bagozzi, R. P., & Yi, Y. (1988). On the evaluation of structural equation models *Journal of the Academy of Marketing Science, 16*(1), 74-94.

Bagozzi, R. P., & Yi, Y. (2012). Specification, Evaluation, and Interpretation of Structural Equation Models. *Journal of the Academy of Marketing Science, 40*(1), 8-34.

Bain, J. S. (1956). *Barriers to Competition*. Cambridge, MA: Harvard University Press.

Bain, J. S. (1959). *Industrial Organization*. New York: John Wiley & Sons.

Balabanis, G., Theodosiou, M., & Katsikea, E. S. (2004). Export Marketing: Developments and Research Agenda. *International Marketing Review, 21*(4/5), 353-377.

Baldauf, A., Cravens, D., & Wagner, U. (2000). Examining Determinants of Export Performance in Small Open Economics. *Journal of World Business, 35*(1), 61-79.

Bandalos, D. L., & Finney, S. J. (2009). Item Parceling Issues in Structural Equation Modeling. In G. A. Marcoulides & R. E. Schumacker (Eds.), *New Developments and Techniques in Structural Equation Modeling*. New Jersey: Lawrence Erlbaum Associates, Inc.

Bank, A. D. (2009). *Asian Development Outlook 2009: Rebalancing Asia's Growth*. Mandaluyong City: Philippines: Asian Development Bank.

Barney, J. (1991). Firm Resources and Sustained Competitive Advantage. *Journal of Management, 17*, 99-120.

Barney, J. (2001). Is the Resource-Based View a Useful Perspective for Strategic Management Research? Yes. *Academy of Management Review, 26*(1), 41-56.

Barney, J. (2002). *Gaining and Sustained Competitive Advantage* (2 ed.). New Jersey: Pearson.

Barney, J., & Clark, D. N. (2007). *Resource-Based Theory: Creating and Sustaining Competitive Advantage*. New York: Oxford University Press.

Barney, J. B., & Arikan, A. M. (2005). The Resource-Based View: Origins and Implications. In M. A. Hitt, R. E. Freeman & J. R. Harris (Eds.), *Handbook of Strategic Management* (pp. 124-188). Oxford: Blackwell.

Barret, P. (2007). Structural Equation Modelling: Adjudging Model Fit. *Personality and Individual Differences, 42*(5), 815-824.

Barringer, B. R., & Harrison, J. S. (2000). Walking a Tightrope: Creating Value through Interorganizational Relationships. *Journal of Management, 26*(3), 367-403.

Bartlett, J. E., Kotrlik, J. W., & Higgins, C. C. (2001). Organizational Research: Determining Appropriate Sample Size in Survey Research. *Information Technology, Learning, and Performance Journal, 19*(1), 43-50.

Beamish, P., Craig, R., & Mcllelan, K. (1993). The Performance Characteristics of Canadian Versus UK. Exporters in Small and Medium Sized Firms. *Management International Review, 23*(2), 121-137.

Becerra, M. (2008). A Resource-Based Analysis of the Conditions for the Emergence of Profits. *Journal of Management, 34*(6), 1110-1126.

Becerra, M. (2009). *The Theory of the Firm for Strategic Management: Economic Value Analysis*. Cambridge: Cambridge University Press.

Becker, J., & Homburg, C. (1999). Market-Oriented Management: A System-Based Perspective. *Journal of Market-Focused Management, 4*(1), 17-41.

Bennett, R. (1996). *Corporate Strategy and Business Planning*. London: Pitman Publishing.

Bentler, P. M. (1995). *EQS Structural Equations Program Manual*. Encino, CA: Multivariate Software, Inc.

Bijmolt, H., & Zwart, S. (1994). The Impact of Internet Factors on the Export Success of Dutch Small and Medium Sized Firms. *Journal of Small Business Management, 32*(2), 69-82.

Blesa, A., & Bigne, E. (2005). The Effect of Market Orientation on Dependence and Satisfaction in Dyadic Relationships. *Marketing Intelligence & Planning, 23*(3), 249-265.

Bollen, K. A. (1989). *Structural Equation with Latent Variables*. New York: John Wiley & Sons.

Bowman, C., & Ambrosini, V. (1997). Using Single Respondents in Strategy Research. *British Journal of Management, 8*, 119-131.

Brandenburger, A. (2002). Porter's Added Value: High Indeed! *Academy of Management Executive, 16*(2), 58-60.

Brandenburger, A. M., & Nalebuff, B. J. (1995). The Right Game: Use Game Theory to Shape Strategy. *Harvard Business Review, 73*(4), 57-71.

Brandenburger, A. M., & Nalebuff, B. J. (1996). *Co-Opetition*. New York: Doubleday.

Bright, K. D., & Smith, P. M. (2002). The Use of Incentives to Affect Response Rates for a Mail Survey of U.S. Marina Decision Makers. *Forest Products Journal, 52*(10), 26-29.

Brislin, R. W. (1980). Translation and Content Analysis of Oral and Written Material. In H. C. Triandis & J. W. Berry (Eds.), *Handbook of Cross-Cultural Psychology* (Vol. 1). Boston: Allyn & Bacon.

Brouthers, K. D., Brouthers, L. E., & Werner, S. (2008). Resource-Based Advantages in an International Context. *Journal of Management, 34*(2), 189-217.

Buhi, E. R., Goodson, P., & Neilands, T. B. (2008). Out of Sight, Not Out of Mind: Strategies for Handling Missing Data. *American Journal of Health Behaviour, 32*(1), 83-92.

Burns, A. C., & Bush, R. F. (1998). *Marketing Research*. New Jersey: Prentice-Hall.

Byrne, B. M. (2010). *Structural Equation Modeling with AMOS: Basic Concepts, Applications, and Programming* (2nd ed.). New York: Routledge.

Cadogan, J. W., & Cui, C. C. (2004). Chinese Export Agents' Adoption of Export Market-Oriented Behaviours: Measurement and Performance Relationship. *Journal of Asia Pacific Marketing, 3*(2), 21-37.

Cadogan, J. W., Cui, C. C., & Li, E. K. Y. (2003). Export Market-Oriented Behavior and Export Performance: The Moderating Roles of Competitive Intensity and Technological Turbulence. *International Marketing Review, 20*(5), 493-513.

Cadogan, J. W., Cui, C. C., Morgan, R. E., & Story, V. M. (2006). Factors Facilitating and Impeding the Development of Export Market-Oriented Behavior: A Study of Hong Kong Manufacturing Exporters. *Industrial Marketing Management, 35*(5), 634-647.

Cadogan, J. W., & Diamantopoulos, A. (1995). Narver and Slater, Kohli and Jaworski and the Market Orientation Construct: Integration and Internationalization. *Journal of Strategic Marketing, 3*(1), 41-60.

Cadogan, J. W., Diamantopoulos, A., & Mortanges, C. P. (1999). A Measure of Export Market Orientation: Scale Development and Cross-Cultural Validation. *Journal of International Business Studies, 30*(4), 689-697.

Cadogan, J. W., Paul, N. J., Salminen, R. T., Puumalainen, K., & Sundqvist, S. (2001). Key Antecedents to "Export" Market-Oriented Behaviors: A Cross-National Empirical Examination. *International Journal of Research in Marketing, 18*(3), 261-282.

Cadogan, J. W., Sundqvist, S., Salminen, R. T., & Puumalainen, K. (2002). Market-Oriented Behavior: Comparing Service with Product Exporters. *European Journal of Marketing, 36*(9/10), 1076-1102.

Cadogan, J. W., Sundqvist, S., Salminen, R. T., & Puumalainen, K. (2005). Export Marketing, Interfunctional Interactions, and Performance Consequences. *Journal of Academy of Marketing Science, 33*, 520-535.

Calantone, R. J., Kim, D., Schmidt, J. B., & Cavusgil, S. T. (2006). The Influence of Internal and External Firm Factors on International Product Adaptation Strategy and Export Performance: A Three-Country Comparison. *Journal of Business Research, 59*, 176-185.

Caloghirou, Y., Protogerou, A., Spanos, Y., & Papagiannakis, L. (2004). Industry versus Firm-Specific Effects on Performance: Contrasting SMEs and Large-Sized Firms. *European Management Journal, 22*, 231-243.

Carmeli, A. (2004). Assessing Core Intangible Resource. *European Management Journal, 22*(1), 110-122.

Carmeli, A., & Tishler, A. (2004). The Relationships between Intangible Organizational Elements and Organizational Performance. *Strategic Management Journal, 25*(13), 1257-1278.

Casson, M. (2005). Entrepreneurship and the Theory of the Firm. *Journal of Economic Behavior & Organization, 58*, 327-348.

Cavusgil, S. T., & Elvey-Kirk, L. A. (1998). Mail Survey Response Behavior: A Conceptualization of Motivating Factors and an Empirical Study. *European Journal of Marketing, 32*(11/12), 1165-1192.

Cavusgil, T. (1984). Organizational Characteristics Associated with Export Activity. *Journal of Management Studies, 21*(1), 3-22.

Cavusgil, T., & Kirpalani, V. (1993). Introducing Products into Export Markets: Success Factors. *Journal of Business Research, 27*(1), 1-15.

Cavusgil, T., & Zou, S. (1994). Marketing Strategy-Performance Relationship: An Investigation of the Empirical Link in Export Market Ventures. *Journal of Marketing, 58*, 1-21.

Chadee, D. D., & Zhang, B. Y. (2000). The Impact of Guanxi on Export Performance: A Study of New Zealand Firms Exporting to China. *Journal of Global Marketing, 14*(1/2), 129-149.

Chan, T. (1992). Emerging Trends in Export Channel Strategy: An Investigation of Hong Kong and Singaporean Firms. *European Journal of Marketing, 26*(3), 18-26.

Chang, T. Z., & Chen, S. J. (1998). Market Orientation, Service Quality and Business Profitability: A Consequence Model and Empirical Evidence. *The Journal of Services Marketing, 12*(4), 246-264.

Chatterjee, S., & Wernerfelt, B. (1991). The Link between Resources and Type of Diversification: Theory and Evidence. *Strategic Management Journal, 12*, 33-48.

Cheung, G. W., & Lau, R. S. (2008). Testing Mediation and Suppression Effects of Latent Variables: Bootstrapping with Structural Equation Models. *Organizational Research Methods, 11*(2), 296-325.

Chin, W. (1998). The Partial Least Squares for Structural Equation Modelling. In G. A. Marcoulides (Ed.), *Modern Methods for Business Research* (pp. 295-336). Mahwah, NJ: Erlbaum.

Chou, C. P., & Bentley, P. M. (1995). Estimates and Tests in Structural Equation Modeling. In R. H. Hoyle (Ed.), *Structural Equation Modeling: Concepts, Issues, and Applications* (pp. 37-55). Thousand Oaks, CA: Sage.

Chrisman, J. J., Bauerschmidt, A., & Hofer, C. W. (1998). The Determinants of New Venture Performance: An Extended Model. *Entrepreneurship: Theory & Practice, 23*(1), 5-29.

Churchill, G. A. (1987). *Marketing Research: Methodological Foundations* (4th ed.): The Dryden Press.

Churchill, G. A. (1995). *Marketing Research: Methodological Foundations*. Englewood Cliffs, NJ: The Dryden Press.

Claver, E., Molina, J., & Tari, J. (2002). Firm and Industry Effects on Firm Profitability: A Spanish Empirical Analysis. *European Management Journal, 20*, 321-328.

Clulow, V., Gerstman, J., & Barry, C. (2003). The Resource-Based View and Sustainable Competitive Advantage: The Case of a Financial Services Firm. *Journal of European Industrial Training, 27*(5), 220-232.

Cohen, J. (1988). *Statistical Power Analysis for the Behavioral Sciences*. Hillsdale, NJ: Erlbaum.

Cohen, J., & Cohen, P. (1983). *Applied Multiple Regression/Correlation for the behavioral Sciences* (2nd ed.). Hillsdale, New York: Erlbaum.

Collis, D. (1991). A Resource-Based Analysis of Global Competition: The Case of the Bearings Industry. *Strategic Management Journal, 12*, 49-68.

Collis, D., & Montgomery, C. (1995). Competing on Resources: Strategy in the 1990s. *Harvard Business Review, 73*(Jul-Aug), 118-128.

Collis, D., & Montgomery, C. (1998). *Corporate Strategy: A Resource-Based Approach*. Singapore: McGraw-Hill.

Conner, K. (1991). A Historical Comparison of Resource Based Theory and Five Schools of Thought Within Industrial Organization Economics: Do We Have a New Theory of the Firm? *Journal of Management, 17*(1), 121-154.

Cools, K., & Roos, A. (2005). *The Role of Alliances in Corporate Strategy*. Boston, Mass: The Boston Consulting Group.

Covin, J. G., Green, K. M., & Slevin, D. P. (2006). Strategic Process Effects on the Entrepreneurial Orientation-Sales Growth Rate Relationship. *Entrepreneurship Theory and Practice, 30*(1), 57-82.

Cox, A. (1997). *Business Success: A Way of Thinking about Strategic, Critical Supply Chain Assets and Operational Best Practice*. Midsomer Norton: Earlsgate Press.

Cox, A., Ireland, P., Lonsdale, C., Sanderson, J., & Watson, G. (2002). *Supply Chains, Markets and Power*. London: Routledge.

Cravens, D., Shipp, S. H., & Cravens, K. S. (1993). Analysis of Co-Operative Interorganizational Relationships, Strategic Alliance Formation, and Strategic Alliance Effectiveness. *Journal of Strategic Marketing, 1*(1), 55-70.

Creswell, J. W. (1994). *Research Design: Qualitative and Quantitative Approaches*. California: Sage Publications.

Crick, D., Bradshaw, R., & Chaudhry, S. (2002). An Investigation into the Overseas Market Servicing Strategies of Queen's Award for Export Winners: Revisiting the Concentration versus Spreading Debate. *Marketing Intelligence & Planning, 20*(6), 370-377.

Cronbach, L. J. (1951). Coefficient Alpha and the Internet Structure of Tests. *Psychometrika, 16*, 297-334.

Cycyota, C. S., & Harrison, D. A. (2002). Enhancing Survey Response Rates at the Executive Level: Are Employee- or Customer-Level Techniques Effective? *Journal of Management, 28*(2), 151-176.

Czinkota, M., & Ursic, M. (1991). Classification of Exporting Firms According to Sales and Growth into a Share Matrix. *Journal of Business Research, 23*, 243-253.

Das, M. (1994). Successful and Unsuccessful Exporters from Developing Countries: Some Preliminary Findings. *European Journal of Marketing, 28*(12), 19-33.

Das, T. K., & Teng, B. (2000). A Resource-Based Theory of Strategic Alliances. *Journal of Management, 26*(1), 31-61.

Day, G. S. (1994). The Capabilities of Market-Driven Organizations. *Journal of Marketing, 58*(October), 37-52.

Day, G. S., & Wensley, R. (1988). Assessing Advantage: A Framework for Diagnosing Competitive Superiority. *Journal of Marketing, 52*, 1-20.

Dean, D., Menguc, B., & Myers, C. (2000). Revisiting Firm Characteristics, Strategy, and Export Performance Relationship: A Survey of the Literature and an Investigation of New Zealand Small Manufacturing Firm? *Industrial Marketing Management, 29*(5), 461-477.

Deng, S., & Dart, J. (1994). Measuring Market Orientation: A Multi-Factor, Multi-Item Approach. *Journal of Marketing, 10*, 725-742.

Dennis, W. J. (2003). Raising Response Rates in Mail Surveys of Small Business Owners: Results of an Experiment. *Journal of Small Business Management, 31*(3), 278-295.

Deshpande, R., & Farley, J. U. (1998). Measuring Market Orientation: Generalization and Synthesis. *Journal of Market-Focused Management, 2*(3), 213-232.

Deshpande, R., Farley, J. U., & Webster, F. E. (1993). Corporate Culture, Customer Orientation and Innovativeness in Japanese Firms: A Quadrad Analysis. *Journal of Marketing, 57*(January), 23-37.

Dess, G., & Robinson, R. (1984). Measuring Organizational Performance in the Absence of Objective Measures: The Case of the Privately-Held Firm and Conglomerate Business Unit. *Strategic Management Journal, 5*, 265-273.

Dhannani, S., & Scholtes, P. (2002). *Thailand's Manufacturing Competitiveness: Promoting Technology, Productivity and Linkages*: United Nations Industrial Development Organization (UNIDO).

Diamantopoulos, A. (1994). Modelling with LISREL: A Guide for the Uninitiated. *Journal of Marketing Management, 10*, 105-136.

Diamantopoulos, A., & Cadogan, J. W. (1996). Internationalizing the Market Orientation Construct: An In-Depth Interview Approach. *Journal of Strategic Marketing, 4*(1), 23-52.

Diamantopoulos, A., & Kakkos, N. (2007). Managerial Assessment of Export Performance: Conceptual Framework and Empirical Illustration. *Journal of International Marketing, 15*(3), 1-31.

Diamantopoulos, A., & Schlegelmilch, B. (1994). Linking Export Manpower to Export Performance: A Canonical Regression Analysis of European and US Data. *Advances in International Marketing, 6*, 161-181.

Diamantopoulos, A., & Siguaw, J. A. (2000). *Introducing LISREL: A Guide for the Uninitiated*. London: Sage Publications.

DiBenedetto, C. A., & Song, M. (2003). The Relationship between Strategic Type and Firm Capabilities in Chinese Firms. *International Marketing Review, 20*(5), 514-533.

Dichtl, E., Koeglmayr, H., & Mueller, S. (1990). International Orientation As a Precondition for Export Success. *Journal of International Business Studies, 21*, 23-40.

Dierickx, I., & Cool, K. (1989). Asset Stock Accumulation and Sustainability of Competitive Advantage. *Management Science, 35*(12), 1504-1511.

Dillman, D. A. (1987). *Mail and Telephone Surveys: The Design Method*. New York: John Wiley & Sons.

Dillman, D. A. (2000). *Mail and Internet Surveys: The Tailored Design Method*. New York: John Wiley & Sons.

Dominguez, L. V., & Sequira, C. G. (1993). Determinants of LDC Exporters' Performance: A Cross-National Study. *Journal of Business Research, 24*(1), 19-40.

Douglas, S. P., & Craig, C. S. (2007). Collaborative and Iterative Translation: An Alternative Approach to Back Translation. *Journal of International Marketing, 15*(1), 30-43.

Doz, Y. L., & Hamel, G. (1998). *Alliance Advantage*. Boston: Harvard Business School Press.

Easterby-Smith, M., Thorpe, R., & Lowe, A. (1991). *Management Research: An Introduction*. London: Sage Publications.

Efron, B. (1994). Missing Data, Imputation, and the Bootstrap. *Journal of the American Statistical Association, 89*(463), 463-475.

Erdos, P. L. (1970). *Professional Mail Surveys*. New York: McGraw-Hill.

Evangelista, F. (1994). Export Performance and its Determinants: Some Empirical Evidence From Australian Manufacturing Firms. *Advances in International Marketing, 6*, 207-229.

Evans, J., & Berman, B. (2001). Conceptualizing and Operationalizing Business-to-Business Value Chain. *Industrial Marketing Management, 30*, 135-148.

Fahy, J. (2000). A Resource-Based View of the Firm: Some Stumbling-Blocks on the Road to Understanding Sustainable Competitive Advantage. *Journal of European Industrial Training, 24*, 94-104.

Fahy, J. (2002). A Resource-Based Analysis of Sustainable Competitive Advantage in A Global Environment. *International Business Review, 11*, 57-78.

Fahy, J., & Smithee, A. (1999). Strategic Marketing and the Resource-Based View of the Firm. *Academy of Marketing Science Review, 10*(1), 1-20.

Fang, E., Palmatier, R. W., Scheer, L. K., & Li, N. (2008). Trust at Different Organizational Levels. *Journal of Marketing, 72*(March), 80-98.

Fielding, N., & Fielding, J. (1986). *Linking Data, Qualitative Research Methods*. London: Sage Publications.

Fornell, C., & Larcker, D. F. (1981). Evaluating Structural Equation Models with Unobservable Variables and Measurement Error. *Journal of Marketing Research, 18*(1), 39-50.

Foss, N. J. (Ed.). (1997). *Resources, Firms, and Strategies: A Reader in the Resource-Based Perspective*. New York: Oxford University Press.

Foss, N. J., & Knudsen, T. (2003). The Resource-Based Tangle: Towards a Sustainable Explanation of Competitive Advantage. *Managerial and Decision Economics, 24*, 291-307.

Fox, C. M., Robinson, K. L., & Boardley, D. (1998). Cost-Effectiveness of Follow-Up Strategies in Improving the Response Rate of Mail Surveys. *Industrial Marketing Management, 27*, 127-133.

Francis, J., & Collins-Dodd, C. (2000). The Impact of Firms' Export Orientation on the Export Performance of High-Tech Small and Medium-Sized Enterprises. *Journal of International Marketing, 8*(3), 84-103.

Galbreath, J. (2005). Which resources matter the most to firm success? An Exploratory Study of Resources-Based Theory. *Technovation, 25*, 979-987.

Gao, G. Y., Murray, J. Y., Kotabe, M., & Lu, J. (2010). A "strategy tripod" perspective on export behaviors: Evidence from domestic and foreign firms based in an emerging economy. *Journal of International Business Studies, 41*(3), 377-396.

Gatignon, H., Tushman, M. L., Smith, W., & Anderson, P. (2002). A Structural Approach to Assessing Innovation: Construct Develoment of Innovation Locus, Type, and Characteristics. *Management Science, 48*, 1103-1122.

Gerbing, D. W., & Anderson, J. C. (1988). An Updated Paradigm for Scale Development Incorporating Unidimensionality and Its Assessment. *Journal of Marketing Research, 25*(May), 186-192.

Gibbs, R., & Humphries, A. (2009). *Strategic Alliances & Marketing Partnerships: Gaining Competitive Advantage through Collaboration and Partnering*. London: Kogan Page Limited.

Gounaris, S. P. (2006). Internal-Market Orientation and its Measurement. *Journal of Business Research, 59*, 432-448.

Gounaris, S. P. (2008). The Notion of Internal Market Orientation and Employee Job Satisfaction: Some Preliminary Evidence. *Journal of Services Marketing, 22*(1), 68-90.

Grandcolas, U., Rettie, R., & Marushenko, K. (2003). Web Survey Bias: Sample or Mode Effect? *Journal of Marketing Management, 19*, 541-561.

Grant, R. (1991). The Resource Based Theory of Competitive Advantage: Implications for Strategy Formation. *California Management Review, 33*(3), 114-135.

Grant, R. M. (1997). *Contemporary Strategy Analysis: Concepts, Techniques, Applications* (2nd ed.). Oxford: Blackwell Publishers.

Grant, R. M. (2002). *Contemporary Strategy Analysis*. Oxford: Blackwell Publishers.

Greenley, G. E. (1995). Market Orientation and Company Performance: Empirical Evidence from UK Companies. *British Journal of Management, 6*(1), 1-13.

Greenley, G. E., Hooley, G., & Rudd, J. M. (2005). Market Orientation in a Multiple Stakeholder Orientation Context: Implications for Marketing Capabilities and Assets. *Journal of Business Research, 58*, 1483-1494.

Greer, T. V., Chuchinprakarn, N., & Seshadri, S. (2000). Likelihood of Participating in Mail Survey Research: Business Respondents' Perspectives. *Industrial Marketing Management, 29*, 97-109.

Griffis, S. E., Goldsby, T. J., & Cooper, M. (2003). Web-Based and Mail Surveys: A Comparison of Response, Data, and Cost. *Journal of Business Logistics, 24*(2), 237-258.

Gronroos, C. (2006). Adopting a Service Logic for Marketing. *Marketing Theory, 6*(3), 317-333.

Gu, F. F., Hung, K., & Tse, D. K. (2008). When Does Guanxi Matter? Issues of Capitalization and Its Dark Sides. *Journal of Marketing, 72*(July), 12-28.

Gulati, R., Nohria, N., & Zaheer, A. (2000). Strategic Networks. *Strategic Management Journal, 21*, 203-215.

Gummesson, E. (1991). Marketing-Orientation Revisited: The Crucial Role of the Part-Time Marketer. *European Journal of Marketing, 25*(2), 60-75.

Gummesson, E. (1994). Making Relationship Marketing Operational. *International Journal of Service Industry Management, 5*(5), 5-20.

Gummesson, E. (2008). Implementation requires a Relationship Paradigm. *Journal of the Academy of Marketing Science, 26*(3), 242-249.

Hair, J. F., Black, W. C., Babin, B. J., & Anderson, R. E. (2010). *Multivariate Data Analysis: A Global Perspective* (7th ed.). New Jersey: Prentice Hall.

Hall, R. (1992). The Strategic Analysis of Intangible Resources. *Strategic Management Journal, 13*, 135-144.

Hall, R. (1993). A Framework Linking Intangible Resources and Capabilities to Sustainable Competitive Advantage. *Strategic Management Journal, 14*, 607-618.

Hall, W. K. (1980). Survival Strategies in a Hostile Environment. *Harvard Business Review, 58*(5), 75-85.

Hambrick, D., & Mason, P. (1984). Upper Echelons: The Organization as a reflection of its Top Executives. *Academy of Management Executive, 9*, 193-207.

Hamel, G., & Prahalad, C. K. (1994). Competing for the Future. *Harvard Business Review, 72*(4), 122-128.

Han, J. K., Kim, N., & Srivastava, R. K. (1998). Market Orientation and Organizational Performance: Is Innovation a Missing Link? *Journal of Marketing, 62*(October), 30-45.

Harman, H. H. (1967). *Modern Factor Analysis*. Chicago: University of Chicago Press.

Harris, J. R., & Guffey, H. J. (1978). Questionnaire Returns: Stamps Versus Business Reply Envelopes Revisited. *Journal of Marketing Research, 15*(May), 290-293.

Harris, L. C. (1996). Cultural Obstacle to Market Orientation. *Journal of Marketing Practice, 2*(4), 36-52.

Harris, L. C. (2002). Sabotaging Market-Oriented Culture Change: An Exploration of Resistance Justifications and Approaches. *Journal of Marketing Theory and Practice, 10*(3), 58-74.

Hart, S. (1987). The Use of the Survey in Industrial Market Research. *Journal of Marketing Management, 3*(1), 25-38.

Harvey, M., Novicevic, M. M., & Kiessling, T. (2001). Hypercompetition and the Future of Global Management in the Twenty-First Century. *Thunderbird International Business Review, 43*(5), 599-616.

Heide, J. B., & John, G. (1992). Do Norms Matter in Marketing Relationships? *Journal of Marketing, 56*(April), 32-44.

Hill, C. W. L., & Deeds, D. L. (1996). The Importance of Industry Structure for the Determination of Firm Profitability: A Neo-Austrian Perspective. *Journal of Management Studies, 33,* 429-451.

Hitt, M. A., Dacin, M. T., Levitas, E., Arregle, J.-L., & Borza, A. (2000). Partner Selection in Emerging and Developed Market Contexts: Resource-Based and Organizational Learning Perspectives. *Academy of Management Journal, 43,* 449-467.

Holzmuller, H., & Stottinger, B. (1996). Structural Modeling of Success Factors in Exporting: Cross-Validation and Further Development of An Export Performance Model. *Journal of International Marketing, 4*(2), 29-55.

Hooley, G., Broderick, A., & Moller, K. (1998). Competitive Positioning and the Resource-Based View of the Firm. *Journal of Strategic Marketing, 6*(2), 97-116.

Hooley, G., Cox, T., Fahy, J., & Shipley, D. (2000). Market Orientation in the Transition Economies of Central Europe: Tests of the Narver and Slater Market Orientation Scales. *Journal of Business Research, 50*(3), 273-285.

Hooley, G., & Greenley, G. E. (2005). The Resource Underpinnings of Competitive Positions. *Journal of Strategic Marketing, 13,* 93-116.

Hooley, G., Greenley, G. E., Cadogan, J. W., & Fahy, J. (2005). The Performance Impact of Marketing Resource. *Journal of Business Research, 58,* 18-27.

Hooley, G., Greenley, G. E., Fahy, J., & Cadogan, J. W. (2001). Market-Focused Resources, Competitive Positioning and Firm Performance. *Journal of Marketing Management, 17,* 503-520.

Hoopes, D. G., Madsen, T. L., & Walker, G. (2003). Why is There a Resource-Based View? Toward a Theory of Competitive Heterogeneity. *Strategic Management Journal, 24*(10), 889-902.

Hoskisson, R. E., Hitt, M. A., Wan, W. P., & Yiu, D. (1999). Theory and Research in Strategic Management: Swings of a Pendulum. *Journal of Management, 25*(3), 417-456.

Hoyle, R. H., & Panter, A. T. (1995). Writing about Structural Equation Models. In R. H. Hoyle (Ed.), *Structural Equation Modeling: Concepts, Issues, and Applications* (pp. 158-176). Thousand Oaks, CA: Sage.

Hu, L., & Bentler, P. M. (1995). Evaluating Model Fit. In R. H. Hoyle (Ed.), *Structural Equation Modeling: Concepts, Issues, and Applications* (pp. 76-99). Thousand Oaks, CA: Sage Publications.

Huber, G. P., & Power, D. J. (1985). Retrospective Report of Strategic-Level Managers: Guidelines for Increasing Their Accuracy. *Strategic Management Journal, 6*(April-June), 171-180.

Hughes, M. A., Price, R. L., & Marrs, D. W. (1986). Linking Theory Construction and Theory Testing: Models with Multiple Indicators of Latent Variables. *Academy of Management Review, 11*(1), 128-144.

Hunt, S. D., & Lambe, C. J. (2000). Marketing's Contribution to Business Strategy: Market Orientation, Relationship Marketing and Resource-Advantage Theory. *International Journal of Management Reviews, 2*(1), 17-43.

Hunt, S. D., & Morgan, R. M. (1995). The Comparative Advantage Theory of Competition. *Journal of Marketing, 59*(April), 1-15.

Hunt, S. D., & Morgan, R. M. (1997). Resource-Advantage Theory: A Snake Swallowing its Tail or a General Theory of Competition? *Journal of Marketing, 61*, 74-82.

Iacobucci, D., Saldanha, N., & Deng, X. (2007). A Mediation on Mediation: Evidence that Structural Equations Models Perform Better Than Regressions. *Journal of Consumer Psychology, 17*(2), 140-154.

Im, S., & Workman, J. P. (2004). Market Orientation, Creativity, and New Product Performance in High-Technology Firms. *Journal of Marketing, 68*(April), 114-132.

Ireland, R. D., Hitt, M. A., & Vaidyanath, D. (2002). Alliance Management as Sources of Competitive Advantage. *Journal of Management, 28*(3), 413-446.

Irvin, R., & Michaels, E. (1989). Core Skills: Doing the Right Things Right. *The McKinsey Quarterly, Summer*, 4-19.

Itami, H. (1987). *Mobilizing Invisible Assets*. Cambridge, MA: Harvard University Press.

Jacobson, R. (1992). The "Austrian" School of Strategy. *Academy of Management Review, 17*, 782-807.

James, J. M., & Bolstein, R. (1990). The Effect of Monetary Incentives and Follow-Up Mailings on Response Rate and Response Quality in Mail Surveys. *Public Opinion Quarterly, 54*(3), 346-361.

James, L. R., Mulaik, S. A., & Brett, J. M. (2006). A Tale of Two Methods. *Organizational Research Methods, 9*(2), 232-244.

Jarvis, C. B., MacKenzie, S. B., & Podsakoff, P. M. (2003). A Critical Review of Construct Indicators and Measurement Model Misspecification in Marketing and Consumer Research. *Journal of Consumer Research, 30*(3), 199-218.

Jaworski, B. J., & Kohli, A. K. (1993). Market Orientation: Antecedents and Consequences. *Journal of Marketing, 57*(April), 1-18.

Jobber, D., Mirza, H., & Wee, K. H. (1991). Incentives and Response Rates to Cross-National Business Surveys: A Logit Model Analysis. *Journal of International Business Studies, 22*(4), 711-721.

Jobber, D., & O'Reilly, D. (1998). Industrial Mail Surveys: A Methodological Update. *Industrial Marketing Management, 27*, 95-107.

Jobber, D., Saunders, J., & Mitchell, V. W. (2004). Prepaid Monetary Incentives Effects on Mail Survey Response. *Journal of Business Research, 57*, 21-25.

Johanson, J., & Arunthanes, W. (1995). Ideal and Actual Product Adaptation in US Exporting Firm. *International Marketing Review, 12*(3), 31-46.

Johanson, J., & Mattsson, G. (1995). International Marketing and Internationalization Process. In S. J. Paliwoda & J. K. Ryan (Eds.), *International Marketing Reader*. London: Routledge.

Johanson, J., & Vahlne, J. (1990). The Mechanism of Internationalization. *International Marketing Review, 7*(4), 11-24.

Johanson, J., & Vahlne, J. (2006). Commitment and Opportunity Development in the Internationalization Process: A Note on the Uppsala Internationalization Process Model. *Management International Review, 46*(2), 165-178.

Johansson, J. K. (1995). International Alliances: Why Now? *Journal of Academy of Marketing Science, 23*(4), 301-305.

Johnson, J., & Raven, P. V. (1996). Relationship Quality, Satisfaction and Performance in Export Channels. *Journal of Marketing Channels, 5*(3/4), 19-46.

Joreskog, K. G., & Sorbom, D. (1989). *LISREL 7: A Guide to the Program and Applications*. Chicago: SPSS Inc.

Joreskog, K. G., & Wold, H. O. (1982). The ML and PLS Technique for Modelling with Latent Variables: Historical and Comparative Aspects. In K. G. Joreskog & H. O. Wold (Eds.), *Systems under Indirect Observation (Part I)* (pp. 263-270). Amsterdam: North-Holland.

Judd, V. C. (2003). Achieving a Customer Orientation using "People Power", the "5th P". *European Journal of Marketing, 37*(10), 1301-1313.

Kahn, K. B. (2001). Market Orientation, Interdepartmental Integration, and Product Development Performance. *Journal of Product Innovation Management, 18*(5), 314-323.

Kalafatis, S. P., & Tsogas, M. H. (1994). Impact of the Inclusion of an Article as an Incentive in Industrial Mail Surveys. *Industrial Marketing Management, 23*, 137-143.

Kaleka, A. (2002). Resource and Capabilities Driving Competitive Advantage in Export Market: Guidelines for Industrial Exporters. *Industrial Marketing Management, 31*(3), 273-283.

Kaleka, A. (2011). When Exporting Manufacturers Compete on the Basis of Service: Resources and Marketing Capabilities Driving Service Advantage and Performance. *Journal of International Marketing, 19*(1), 40-58.

Kalof, L., Dan, A., & Dietz, T. (2008). *Essentials of Social Research*. Berkshire: Open University Press.

Kanuk, L., & Berenson, C. (1975). Mail Surveys and Response Rates: A Literature Review. *Journal of Marketing Research, 12*(November), 440-453.

Katsikeas, C. (1994). Export Competitive Advantages: The Relevance of Firm Characteristics. *International Marketing Review, 11*(4), 33-53.

Katsikeas, C., Leonidas, L., & Morgan, N. (2000). Firm-Level Export Performance Assessment: Review, Evaluation, and Development. *Journal of The Academy of Marketing Science, 28*(4), 493-511.

Katsikeas, C., Piercy, N., & Ionnadis, C. (1996). Determinants of Export Performance in a European Context. *European Journal of Marketing, 30*(6), 6-35.

Kaynak, E., & Kuan, W. (1993). Environment, Strategy, Structure and Performance in the Context of Export Activity. *Journal of Business Research, 27*, 33-49.

Kelloway, E. K. (1995). Structural Equation Modeling in Perspective. *Journal of Organizational Behavior, 16*, 215-224.

Ketchen, D., & Giunipero, L. (2004). The Intersection of Strategic Management and Supply Chain Management. *Industrial Marketing Management, 33*, 51-56.

Ketchen, D., Hult, G., & Slater, S. (2007). Towards Greater Understanding of Market Orientation and the Resource-Based View. *Strategic Management Journal, 29*(9), 961-964.

Kim, E., Nam, D., & Stimpert, J. L. (2004). Testing the Applicability of Porter's Generic Strategies in the Digital Age: A Study of Korean Cyber Malls. *Journal of Business Strategies, 21*(1), 19-45.

Kim, W. C., & Mauborgne, R. (2005). *Blue Ocean Strategy: How to Create Uncontested Market Space and Make the Competition Irrelevant*. Boston, MA: Harvard Business School Press.

Kinnear, T. C., & Taylor, J. R. (1991). *Marketing Research: An Applied Approach*. New York: McGraw-Hill.

Kline, R. B. (2010). *Principles and Practice of Structural Equation Modeling* (3rd ed.). New York: Guilford Press.

Knight, G. (2000). Entrepreneurship and Marketing Strategy: The SME under Globalization. *Journal of International Marketing, 8*(2), 12-21.

Knight, G., & Cavusgil, T. (2004). Innovation, Organizational Capabilities, and the Born-Global Firm. *Journal of International Business Studies, 35*, 124-141.

Kohli, A. K., & Jaworski, B. J. (1990). Market Orientation: The Construct, Research Propositions, and Managerial Implications. *Journal of Marketing, 54*(2), 1-18.

Kohli, A. K., Jaworski, B. J., & Kumar, A. (1993). MARKOR: A Measure of Market Orientation. *Journal of Marketing, 30*(November), 467-477.

Koksal, M. H., & Ozgul, E. (2010). The Export Competitive Advantage of Turkish Manufacturing Companies. *Marketing Intelligence & Planning, 28*(2), 206-222.

Kotabe, M., & Czinkota, M. R. (1992). State Government Promotion of Manufacturing Exports: A Gap Analysis. *Journal of International Business Studies, 23*(4), 637-658.

Kraaijenbrink, J., Spender, J. C., & Groen, A. J. (2010). The Resource-Based View: A Review and Assessment of Its Critiques. *Journal of Management, 36*, 349-372.

Krasnikov, A., & Jayachandran, S. (2008). The Relative Impact of Marketing, Research-and-Development, and Operations Capabilities on Firm Performance. *Journal of Marketing, 72*(July), 1-11.

Kumar, N., Stern, L. W., & Anderson, J. C. (1993). Conducting Interorganizational Research Using Key Informants. *Academy of Management Journal, 36*(6), 1633-1651.

Lado, N., Maydue-Olivares, A., & Rivera, J. (1998). Measuring Market Orientation in Several Population: A Structural Equation Model. *European Journal of Marketing, 32*(1), 23-39.

Lafferty, B. A., & Hult, G. T. M. (2001). A Synthesis of Contemporary Market Orientation Perspectives. *European Journal of Marketing, 35*(1/2), 92-109.

LaGarce, R., & Kuhn, L. D. (1995). The Effect of Visual Stimuli on Mail Survey Response Rates. *Industrial Marketing Management, 24*, 11-18.

Lages, L. (2000). A Conceptual Framework of the Determinants of Export Performance: Reorganizing Key Variables and Shifting Contingencies in Export Marketing. *Journal of Global Marketing, 13*(3), 29-51.

Lages, L., & Lages, C. (2004). The STEP Scale: A Measure of Short-Term Export Performance Improvement. *Journal of International Marketing, 12*(1), 36-56.

Lages, L. F., Silva, G., & Styles, C. (2009). Relationship Capabilities, Quality, and Innovation as Determinants of Export Performance. *Journal of International Marketing, 17*(4), 47-70.

Langerak, F. (2003). The Effect of Market Orientation on Positional Advantage and Organizational Performance. *Journal of Strategic Marketing, 11*(2), 93-115.

Lee, C., & Yang, S. (1990). Impact of Export Market Expansion Strategy on Export Performance. *International Marketing Review, 7*(4), 41-50.

Leonard-Barton, D. (1995). *Wellsprings of Knowledge: Building and Sustaining the Sources of Innovation*. Boston: Harvard Business School Press.

Leonidas, L. C., Dayananda, P., & Marios, T. (2011). National Export-Promotion Programs as Drivers of Organizational Resources and Capabilities: Effects on Strategy, Competitive Advantage, and Performance. *Journal of International Marketing, 19*(2), 1-29.

Leonidou, L., Katsikaes, C., & Hadjimarcou, J. (2002). Building Successful Export Business Relationships: A Behavioral Perspective. *Journal of International Marketing, 10*(3), 96-115.

Leonidou, L., & Theodosiou, M. (2004). The Export Marketing Information System: An Integration of the Extent Knowledge. *Journal of World Business, 39*, 12-36.

Leonidou, L. C., & Katsikeas, C. S. (2010). Integrative Assessment of Exporting Research Articles in Business Journals During the Period 1960-2007. *Journal of Business Research, 63*, 879-887.

Levin, D. M. (1988). *The Opening of Vision: Nihilism and the Postmodern Situation*. London: Routledge.

Levinthal, D. A. (1995). Strategic Management and Exploration of Diversity. In C. Montgomery (Ed.), *Resource-Based and Evolutionary Theories of the Firm*. Boston, MA: Kluwer Academic Press.

Levitas, E., & Chi, T. (2002). Rethinking Rouse and Daellenbach's rethinking: Isolating vs. Testing for Source of Sustainable Competitive Advantage. *Strategic Management Journal, 23*, 957-962.

Lewis-Beck, M. S., Bryman, A., & Liao, T. (2004). *The Sega Encyclopaedia of Social Science Research Methods* (Vol. 3): Sage Thousand Oaks.

Lings, I. N. (1999). Balancing Internal and External Market Orientation. *Journal of Marketing Management, 15*, 239-263.

Lings, I. N. (2004). Internal Market Orientation: Construct and Consequences. *Journal of Business Research, 57*, 405-413.

Lings, I. N., & Greenley, G. E. (2005). Measuring Internal Market Orientation. *Journal of Services Research, 7*(3), 290-305.

Lings, I. N., & Greenley, G. E. (2009). The Impact of Internal and External Market Orientations on Firm Performance. *Journal of Strategic Marketing, 17*(1), 41-53.

Ling-Yee, L. (2007). Marketing Resources and Performance of Exhibitor Firms in Trade Shows: A Contingent Resources Perspective. *Industrial Marketing Management, 36*, 360-370.

Ling-Yee, L., & Ogunmokun, G. (2001). Effect of Export Financing Resources and Supply-Chain Skills on Export Competitive Advantages: Implications for Superior Export Performance. *Journal of World Business, 36*(3), 260-279.

Lippman, S. A., & Rumelt, R. P. (2003). A Bargaining Perspective on Resource Advantage. *Strategic Management Journal, 24*(11), 1069-1086.

Little, R. J. A., & Rubin, D. A. (1987). *Statistical Analysis with Missing Data*. New York: John Wiley and Sons.

Lockett, A., Thompson, S., & Morgenstern, U. (2009). The Development of the Resource-Based View of the Firm: A Critical Appraisal. *International Journal of Management Reviews, 10*, 9-28.

Lopez, V. A. (2001). An Overview Review of the Resource-Based View (RBV) of the Firm, Drawing on Recent Spanish Management Research. *Irish Journal of Management, 22*(2), 105-120.

Louter, P., Ouwerkerk, C., & Bakker, B. (1991). An Inquiry into Successful Exporting. *European Journal of Marketing, 25*(6), 7-23.

Luck, D. J., & Rubin, R. S. (1987). *Marketing Research*. Englewood Cliffs, NJ: Prentice-Hall.

Lummus, R. R., & Vokurka, R. J. (1999). Defining Supply Chain Management: A Historical Perspective and Practical Guidelines. *Industrial Management and Data System, 99*(1), 11-17.

Lumpkin, G., & Dess, G. (1996). Clarifying the Entrepreneurial Orientation Construct and Linking it to Performance. *Academy of Management Review, 21*(1), 135-172.

Lyon, D., Lumpkin, G., & Dess, G. (2000). Enhancing Entrepreneurial Orientation Research: Operationalizing and Measuring a Key Strategic Decision Making Process. *Journal of Management, 26*(5), 1055-1085.

MacCallum, R. C., Widaman, K. F., Zhang, S., & Hong, S. (1999). Sample Size in Factor Analysis. *Psychological Bulletin, 4*, 84-99.

Madsen, T. (1989). Successful Export Marketing Management: Some Empirical Evidence. *International Marketing Review, 6*(44), 41-57.

Madsen, T. (1994). A Contingency Approach to Export Performance Research. *Advances in International Marketing, 6*, 25-42.

Makadok, R. (1999). Interfirm Differences in Scale Economies and the Evolution of Market Shares. *Strategic Management Journal, 20*, 935-952.

Makhija, M. (2003). Comparing the Resource-Based and Market-Based Views of the Firm: Empirical Evidence from Czech Privatization. *Strategic Management Journal, 24*, 433-451.

Malhotra, N. K., & Birks, D. F. (2007). *Marketing Research: An Applied Approach* (3rd ed.). Harlow: Prentice Hall.

Malhotra, N. K., Kim, S. S., & Patil, A. (2006). Common Method Variance in IS Research: A Comparison of Alternative Approaches and a Re-Analysis of Past Research. *Management Science, 52*(12), 1865-1883.

Malhotra, N. K., Patil, A., & Kim, E. Y. (2007). Bias Breakdown. *Marketing Research, 19*(1), 24-29.

Martin, S. (1993). *Advanced Industrial Economics*. Oxford: Blackwell Publishers.

Mason, E. S. (1939). Price and Production Policies of Large-Scale Enterprises. *American Economic Review, 29*, 61-74.

Mason, K. J., & Harris, L. C. (2006). Market Orientation Emphases: An Exploration of Macro, Meso and Micro Drivers. *Marketing Intelligence & Planning, 24*(6), 552-571.

Matanda, M. J., & Freeman, S. (2009). Effect of Perceived Environmental Uncertainty on Exporter-Importer Inter-Organisational Relationships and Export Performance Improvement. *International Business Review, 18*, 89-107.

Matear, S., Gray, B., & Irving, G. (2000). What Makes a Good Export Channel Relationship? *Asia Pacific Journal of Management, 17*, 539-559.

Mathyssens, P., & Pauwels, P. (1996). Assessing Export Performance Measurement. *Advances in International Marketing, 8*, 85-114.

Matsuno, K., & Mentzer, J. T. (2000). The Effects of Strategy Type on the Market Orientation-Performance Relationship. *Journal of Marketing, 64*(January), 1-16.

Mattila, A. S., & Enz, C. A. (2002). The role of Emotions in Service Encounters. *Journal of Services Marketing, 4*(4), 268-277.

Mauri, A. J., & Michaels, M. P. (1998). Firm and Industry Effects within Strategic Management: An Empirical Examination. *Strategic Management Journal, 19*, 211-219.

Maxwell, J. (1998). Designing a Qualitative Study. In B. Leonard & D. J. Rog (Eds.), *Handbook of Applied Social Research Methods*. Thousands Oaks: Sage Publications.

McGrath, R. G., MacMillan, I. C., & Venkataraman, S. (1995). Defining and Developing Competence: A Strategic Process Paradigm. *Strategic Management Journal, 16*(4), 251-275.

McKereghan, D. (1998). Quantitative Versus Qualitative Research: An Attempt to Clarify the Problem. *available online at: http://home.comcast.net/~lady.socrates/qvq.html*.

Miller, A., & Dess, G. G. (1993). Assessing Porter's (1980) Model in terms of its Generalizability, Accuracy, and Simplicity. *Journal of Management Studies, 30*(4), 553-585.

Miller, D. (1992). The Generic Strategy Trap. *Journal of Business Strategy, 13*, 37-41.

Mintzberg, H., Ahlstrand, B., & Joseph, L. (1998). *Strategy Safari: A Guided Tour Through the Wilds of Strategic Management*. New York: Free Press.

Mohr, J., & Spekman, R. (1994). Characteristics of Partnership Success: Partnership Attributes, Communication Behavior, and Conflict Resolution Techniques. *Strategic Management Journal, 15*, 135-152.

Morgan, N. A., Kaleka, A., & Katsikeas, S. C. (2004). Antecedents of Export Venture Performance: A Theoretical Model and Empirical Assessment. *Journal of Marketing, 68*(1), 90-108.

Morgan, N. A., Vorhies, D. W., & Mason, C. H. (2009). Market Orientation, Marketing Capabilities, and Firm Performance. *Strategic Management Journal, 30,* 909-920.

Murray, J. Y., Gao, G. Y., Kotabe, M., & Zhou, N. (2007). Assessing Measurement Invariance of Export Market Orientation: A Study of Chinese and Non-Chinese Firms in China. *Journal of International Marketing, 15*(4), 41-62.

Murray, J. Y., Gerald, Y. G., & Masaaki, K. (2011). Market Orientation and Performance of Export Ventures: The Process Through Marketing Capabilities and Competitive Advantages. *Journal of Academy of Marketing Science, 39*(2), 252-269.

Naidu, G., & Prasad, V. (1994). Predictors of Export Strategy and Performance of Small and Medium-Sized Firms. *Journal of Business Research, 31*, 107-115.

Namiki, N. (1994). A Taxonomic Analysis of Export Marketing Strategy: An Exploratory Study of U.S. Exporters of Electronic Products. *Journal of Global Marketing, 8*(1), 27-50.

Narver, J. C., & Slater, S. F. (1990). The Effect of a Market Orientation on Business Profitability. *Journal of Marketing, 54*(4), 20-35.

Navarro, A., Losada, F., Ruzo, E., & Diez, J. (2010). Implications of Perceived Competitive Advantages, Adaptation of Marketing Tactics and Export Commitment on Export Performance. *Journal of World Business, 45*, 49-58.

Nebenzahl, I. D., & Jaffe, E. D. (1995). Facsimile Transmission Versus Mail Delivery of Self-Administered Questionnaires in Industrial Surveys. *Industrial Marketing Management, 24*, 167-175.

Nevis, E. C., Dibella, A. J., & Gould, J. M. (1995). Understanding Organizations as Learning Systems. *Sloan Management Review, 36*(2), 73-85.

Newbert, S. L. (2007). Empirical Research on the Resource-Based View of the Firm: An Assessment and Suggestions for Future Research. *Strategic Management Journal, 28*(2), 121-146.

Newbert, S. L. (2008). Value, Rareness, Competitive Advantage, and Performance: A Conceptual-Level Empirical Investigation of the Resource-Based View of the Firm. *Strategic Management Journal, 29*, 745-768.

Newby, R., Watson, J., & Woodliff, D. (2003). SME Survey Methodology: Response Rates Data Quality, and Cost Effectiveness. *Entrepreneurship Theory and Practice, 28*(2), 163-172.

Nothnagel, K. (2008). *Empirical Research within Resource-Based Theory*. Wiesbaden: Gabler.

Nunnally, J. C. (1967). *Psychometric Theory*. New York: McGraw-Hill.

Nunnally, J. C., & Bernstein, I. H. (1994). *Psychometric Theory*. New York: McGraw-Hill.

O'Donnell, S., & Jeong, I. (2000). Marketing Standardization within Global Industries: An Empirical Study of Performance Implications. *International Marketing Review, 17*(1), 19-33.

Olkkonen, R., Tikkanen, H., & Lindblom, A. (2007). Relationalism as Marketing Strategy: An Empirical Study Among Finish Business-to-Business Marketing Firms. *Journal of Euromarketing, 17*(1), 49-68.

Olsson, U. H., Foss, T., & Breivik, E. (2004). Two Equivalent Discrepancy Functions for Maximum Likelihood Estimation: Do Their Test Statistics Follow a Non-Central CM-Square under Model Misspecification? *Sociological Methods and Research, 32*, 453-510.

Olsson, U. H., Foss, T., Troye, S. V., & Howell, R. D. (2000). The Performance of ML, GLS, and WLS estimation in Structural Equation Modeling Under Conditions of Misspecification and Nonnormality. *Structural Equation Modeling, 7*, 557-595.

Oppermannt, M. (2000). Triangulation-A Methodological Discussion. *International Journal of Tourism Research, 2*, 141-146.

Paliwoda, S. J. (1999). International Marketing: An Assessment. *International Marketing Review, 16*(Spring), 8-17.

Parker, L. (1992). Collecting Data the E-Mail Way. *Training and Development*, (July), 52-54.

Patton, M. (1990). *Qualitative Evaluation and Research Methods* (2nd ed.). Newbury Park, CA: Sage Publications.

Pearce, R. J. (2,000). The General Manager's Perspective on How Factionalism can impact the Behaviors and Effectiveness of Top Managers Inside a Shared Management Joint Venture. *Journal of Management and Governance, 4*, 189-206.

Pelham, A. M. (1997). Market Orientation and Performance: The Moderating Effects of Product and Customer Differentiation. *Journal of Business & Industrial Marketing, 12*(5), 276-296.

Peng, M. W. (2001). The Resource-Based View and International Business. *Journal of Management, 27*, 803-829.

Peng, M. W. (2008). *Global Strategy* (2nd ed.). Mason, OH: South-Western Cengage Learning.

Peng, M. W. (2009). *Global Business*. Cincinnati: South-Western Cengage Learning.

Peng, M. W., Wang, D. Y. L., & Jiang, Y. (2008). An Institution-Based View of International Business Strategy: A Focus on Emerging Economies. *Journal of International Business Studies, 39*(5), 920-936.

Penrose, E. (1959). *The Theory of the Growth of the Firm*. New York: John Wiley and Sons.

Peter, J. P. (1979). Reliability: A Review of Psychometric Basics and Recent Marketing Practices. *Journal of Marketing Research, 16*(February), 6-17.

Peteraf, M. (1993). The Cornerstones of Competitive Advantage: A Resource-Based View. *Strategic Management Journal, 14*, 179-191.

Peteraf, M., & Barney, J. (2003). Unravelling the Resource-Based Tangle. *Managerial and Decision Economics, 24*, 309-323.

Peterson, R. A. (1994). A Meta-Analysis of Cronbach's Coefficient Alpha. *Journal of Consumer Research, 21*(2), 381-391.

Phan, P. (2004). *Trade Liberalisation and Manufacturing Performance in Thailand 1990-2000.* PhD Thesis: University of Wollongong.

Phillips, A. (1974). Commentary. In H. J. Goldschmid, H. M. Mann & J. F. Weston (Eds.), *Industrial Concentration: The New Learning*. Boston, MA: Little Brown & Co.

Piercy, N., Kaleka, A., & Katsikeas, C. (1998). Sources of Competitive Advantage in High Performing Exporting Companies. *Journal of World Business, 33*(4), 378-393.

Podsakoff, P. M., MacKenzie, S. B., & Podsakoff, N. P. (2003). Common Method Biases in Behavioral Research: A Critical Review of the Literature and Recommended Remedies. *Journal of Applied Psychology, 88*(5), 879-903.

Porter, M. E. (1980). *Competitive Strategy: Techniques for Analyzing Industries and Competitors*. New York: Free Press.

Porter, M. E. (1985). *Competitive Advantage: Creating and Sustaining Superior Performance*. New York: Free Press.

Porter, M. E. (1981). The Contributions of Industrial Organization to Strategic Management. *Academy of Management Review, 6*(4), 609-620.

Porter, M. E. (1991). Towards a Dynamic Theory of Strategy. *Strategic Management Journal, 12*, 96-110.

Powell, T. C. (2001). Competitive Advantage: Logical and Philosophical Considerations. *Strategic Management Journal, 22*, 875-888.

Prahalad, C. K., & Hamel, G. (1990). The Core Competence of the Corporation. *Harvard Business Review, 68*(May-Jun), 79-91.

Prastacos, G., Soderquist, K., Spanos, Y., & Van Wassenhove, L. (2002). An Integrated Framework for Managing Change in the New Competitive Landscape. *European Management Journal, 20*, 55-71.

Priem, R., & Butler, J. (2001). Is the Resource-Based View a Useful Perspective for Strategic Management Research? *Academy of Management Review, 26*(1), 22-40.

Raaij, E. M. v., & Stoelhorst, J. W. (2008). The Implementation of a Market Orientation: A Review and Integration of the Contributions to Date. *European Journal of Marketing, 42*(11/12), 1265-1293.

Raven, P. V., McCullough, J. M., & Tansuhaj, P. S. (1994). Environmental Influences and Decision-Making Uncertainty in Export Channels: Effects on Satisfaction and Performance. *Journal of International Marketing, 2*(3), 37-59.

Raykov, T., & Marcoulides, G. A. (2000). *A First Course in Structural Equation Modeling*. London: Lawrence Erlbaum Associates.

Reed, R., & DeFillippi, R. J. (1990). Causal Ambiguity, Barriers to Imitation, and Sustainable Competitive Advantage. *Academy of Management Review, 15*(1), 88-102.

Reid, S. D. (1983). Managerial and Firm Influences on Export Behaviour. *Journal of The Academy of Marketing Science, 11*(3), 323-332.

Rialp, A., & Rialp, J. (2006). International Marketing Research: Opportunities and Challenges in the 21st Century. In S. T. Cavusgil (Ed.), *International Marketing Research (Advances in International Marketing, Volume 17)* (pp. 1-13): Emerald Group Publishing Limited.

Ricardo, D. (1817). *The Principles of Political Economy and Taxation*. London: J. Murray.

Rindfleisch, A., Malter, A. J., Ganesan, S., & Moorman, C. (2008). Cross-Sectional Versus Longitudinal Survey Research: Concepts, Findings, and Guidelines. *Journal of Marketing Research, 45*(3), 261-279.

Robertson, C., & Chetty, S. (2000). A Contingency-Based Approach to Understanding Export Performance. *International Business Review, 9*(2), 211-235.

Rose, G. M., & Shoham, A. (2002). Export Performance and Market Orientation: Establishing an Empirical Link. *Journal of Business Research, 55*(3), 217-225.

Ruekert, R. W. (1992). Developing a Market Orientation: An Organizational Strategy Perspective. *International Journal of Research in Marketing, 9*(3), 225-245.

Rugman, A. M., & Verbeke, A. (2002). Edith Penrose's Contribution to the Resource-Based View of Strategic Management. *Strategic Management Journal, 23*(8), 769-780.

Rumelt, R. P. (1991). How Much Does Industry Matter? *Strategic Management Journal, 12*(3), 167-185.

Samiee, S., & Walters, P. (1990). Influence of Firm Size on Export Planning and Performance. *Journal of Business Research, 20*, 235-248.

Sampler, J. (1998). Redefining Industry Structure for the Information Age. *Strategic Management Journal, 19*, 343-355.

Sapienza, H., Autio, E., George, G., & Zahra, S. A. (2006). Capabilities Perspective on the Effects of Early Internationalization on Firm Survival and Growth. *Academy of Management Review, 31*(4), 914-933.

Saunders, J., & Lee, N. (2005). Whither Research in Marketing? *European Journal of Marketing, 39*(3/4), 245-260.

Saunders, M., Lewis, P., & Thornhill, A. (2009). *Research Methods for Business Students* (5th ed.). Harlow: FT/Prentice Hall.

Schafer, J. L., & Graham, J. W. (2002). Missing Data: Out View of the State of the ART. *Psychological Methods, 7*(2), 147-177.

Scherer, F. M. (1980). *Industrial Market Structure and Economic Performance*. Chicago, IL: Rand McNally.

Schlegelmilch, B., & Ross, A. (1987). The Influence of Managerial Characteristics on Different Measures of Export Success. *Journal of Marketing Management, 3*(2), 145-158.

Schumacker, R. E., & Lomax, R. G. (2004). *A Beginner's Guide to Structural Equation Modeling* (2nd ed.). New Jersey: Lawrence Erlbaum Associates.

Selznick, P. (1957). *Leadership in Administration: A Sociological Interpretation*. New York: Harper and Row.

Shapiro, B. P. (1988). What the Hell is 'Market Orientation'? *Harvard Business Review, 66*(6), 119-125.

Sharma, S. (1996). *Applied Multivariate Techniques*. New York: John Wiley.

Shaw, V. (2000). The Successful Marketing Strategies of German Companies in the UK. *European Journal of Marketing, 34*(1/2), 91-106.

Shoham, A. (1998). Export Performance: A Conceptualization and Empirical Assessment. *Journal of International Marketing, 6*(3), 59-81.

Shoham, A., & Albaum, G. (1994). The Effects of Transfer of Marketing Methods on Export Performance: An empirical Examination. *International Business Review, 3*(3), 219-241.

Simatupang, T. M., & Sridharan, R. (2002). The Collaborative Supply Chain. *The International Journal of Logistics Management, 13*(1), 15-30.

Singer, T., & Czinkota, M. (1994). Factors Associated with Effective Use of Export Assistance. *Journal of International Marketing, 2*(1), 53-71.

Sirmon, D. G., Hitt, M. A., & Ireland, R. D. (2007). Managing Firm Resources in Dynamic Environments to Create Value: Looking Inside the Black Box. *The Academic of Management Review, 32*(1), 273-292.

Skarmeas, D., Katsikeas, C., Spyropoulou, S., & Salehi-Sangari, E. (2008). Market and Supplier Characteristics Driving Distributor Relationship Quality in International Marketing Channels of Industrial Products. *Industrial Marketing Management, 37*, 23-36.

Slack, N., Chambers, S., & Johnston, R. (2007). *Operations Management*. Essex: Pearson Education Limited.

Slater, S. F. (1995). Issues in Conducting Marketing Strategy Research. *Journal of Strategic Marketing, 3*(4), 257-270.

Slater, S. F. (1996). The Challenge of Sustaining Competitive Advantage. *Industrial Marketing Management, 25*, 79-86.

Slater, S. F., & Narver, J. C. (1994). Market Orientation, Customer Value, and Superior Performance. *Business Horizons, 37*(2), 22-28.

Slater, S. F., & Narver, J. C. (1995). Market Orientation and the Learning Organization. *Journal of Marketing, 59*, 63-74.

Sousa, C. (2004). Export Performance Measurement: An Evaluation of the Empirical Research in the Literature. *Academy of Marketing Science Review, 4*(9), 1-22.

Sousa, C., Martinez-Lopez, F., & Coelho, F. (2008). The Determinants of Export Performance: A Review of the Research in the Literature between 1998 and 2005. *International Journal of Management Reviews, 10*(4), 343-374.

Spanos, Y. E., & Lioukas, S. (2001). An Examination into the Causal Logic of Rent Generation: Contrasting Porter's Competitive Strategy Framework and the Resource-Based Perspective. *Strategic Management Journal, 22*, 907-934.

Spector, P. E. (2006). Method Variance in Organizational Research: Truth or Urban Legend. *Organization Research Methods, 9*(2), 221-231.

Spyropoulou, S., Skarmeas, D., & Katsikeas, C. S. (2011). An Examination of Branding Advantage in Export Ventures. *European Journal of Marketing, 45*(6), 910-935.

Sriram, V. (1989). Export Policy and Strategy Implications for Small to Medium Sized Firms. *Journal of Global Marketing, 3*(2), 43-60.

Sriram, V., & Manu, F. A. (1995). Country-Of-Destination and Export Marketing Strategy: A Study of US Exporters. *Journal of Global Marketing, 8*, 171-190.

Srivastava, R. K., Fahy, J., & Christensen, H. K. (2001). The Resource-Based View and Marketing: The Role of Market-Based Assets in Gaining Competitive Advantage. *Journal of Management, 27*(6), 777-802.

Srivastava, R. K., Shervani, T. A., & Fahey, L. (1998). Market-Based Assets and Shareholder Value: A Framework for Analysis. *Journal of Marketing, 62*(1), 2-18.

Stevens, R. E., Wrenn, B., Ruddick, M. E., & Sherwood, P. K. (1997). *The Marketing Research Guide*. New York: The Haworth Press.

Stonehouse, G., & Snowdon, B. (2007). Competitive Advantage Revisited: Michael Porter on Strategy and Competitiveness. *Journal of Management Inquiry, 16*(3), 256-273.

Strauss, A., & Corbin, J. (1990). *Basics of Qualitative Research: Grounded Theory Procedures and Techniques*. Newbury Park, CA: Sage Publications.

Styles, C. (1998). Export Performance Measures in Australia and the United Kingdom. *Journal of International Marketing, 6*(3), 12-36.

Styles, C., & Ambler, T. (1994). Successful Export Practice: The U.K. Experience. *International Marketing Review, 11*(6), 23-47.

Styles, C., Patterson, P. G., & Ahmed, F. (2008). A Relational Model of Export Performance. *Journal of International Business Studies, 39*, 880-900.

Sutton, J. (1991). *Sunk Costs and Market Structure*. Cambridge, MA: MIT Press.

Tabachnick, B. G., & Fidell, L. S. (2007). *Using Multivariate Statistics* (5th ed.). Boston: Pearson Education, Inc.

Tajeddini, K., Trueman, M., & Larsen, G. (2006). Examining the Effect of Market Orientation on Innovativeness. *Journal of Marketing Management, 22*, 529-551.

Taylor, B. G., & Anderson, L. K. (1989). Mail Survey Incentives: The Benefits of Pretesting. *Applied Marketing Research, 29*(3), 25-28.

Teece, D. J. (2002). Dynamic Capabilities, Competence, and the Behavioural Theory of the Firm. In M. Augier & J. G. March (Eds.), *The Economics of Change, Choice and Structure*. Cheltenham: Edward Elgar.

Teece, D. J. (2007). Explicating Dynamic Capabilities: The Nature and Microfoundations of (Sustainable) Enterprise Performance. *Strategic Management Journal, 28*, 1319-1350.

Teece, D. J. (2009). *Dynamic Capabilities and Strategic Management: Organizing for Innovation and Growth*. New York: Oxford University Press.

Teece, D. J., & Pisano, G. (1994). The Dynamic Capabilities of Firms: An Introduction. *Industrial and Corporate Change, 3*, 537-556.

Teece, D. J., Pisano, G., & Shuen, A. (1997). Dynamic Capabilities and Strategic Management. *Strategic Management Journal, 18*(7), 509-535.

Tenenhaus, M., Vinzi, V. E., Chatelin, Y.-M., & Lauro, C. (2005). PLS Path Modeling. *Computational Statistics and Data Analysis, 48*, 159-205.

Thirkell, P. C., & Dau, R. (1998). Export Performance: Success Determinants for New Zealand Manufacturing Exporters. *European Journal of Marketing, 32*(9/10), 813-829.

Thompson, A. A., & Strickland, J. (2008). *Crafting and Executing Strategy: The Quest for Competitive Advantage*. New York: McGraw-Hill Irwin.

Tse, A. C. B. (1998). Comparing the Response Rate, Response Speed and Response Quality of Two Methods of Sending Questionnaire: E-Mail Vs. Mail. *International of Marketing Research, 40*(4), 353-361.

Tull, D. S., & Hawkins, D. I. (1984). *Marketing Research, Measurement and Methods*. New York: MacMillan Publishing.

Vargo, S. L., & Lusch, R. F. (2004). Evolving to a New Dominant Logic for Marketing. *Journal of Marketing, 68*, 1-17.

Venkatraman, N., & Ramanujam, V. (1987). Measurement of Business Economic Performance: An Examination of Method Convergence. *Journal of Management, 13*(1), 109-122.

Vernon, J., & Graham, D. (1971). Profitability of Monopolization by Vertical Integration. *Journal of Political Economy, 79*, 924-925.

Vorhies, D., Harker, M., & Rao, C. (1999). The Capabilities and Performance Advantages of Market-Driven Firms. *European Journal of Marketing, 33*(11/12), 1171-1202.

Vorhies, D., & Morgan, N. (2003). A Configuration Theory Assessment of Marketing Organization Fit with Business Strategy and Its Relationship with Marketing Performance. *Journal of Marketing, 67*, 100-115.

Walsh, J. P., Kiesler, S., Sproull, L. S., & Hesse, B. W. (1992). Self-Selected and Randomly Selected Respondents in a Computer Network Survey. *Public Opinion Quarterly, 56*(2), 241-244.

Walters, P., & Samiee, S. (1990). A Model for Assessing Performance in Small US Exporting Firms. *Entrepreneurship Theory and Practice, 15*(2), 33-50.

Wang, H., Law, K. S., Hackett, R. D., Wang, D., & Chen, Z. X. (2005). Leadere-Member Exchanges As a Mediator of the Relationship Between Transformational Leadership and Followers' Performance and Organizational Citizenship Behavior. *Academy of Management Journal, 48*(3), 420-432.

Wernerfelt, B. (1984). A Resource-Based View of the Firm. *Strategic Management Journal, 5*, 171-180.

Wheeler, C., Ibeh, K., & Dimitratos, P. (2008). U.K. Export Performance Research: Review and Implications. *International Small Business Journal, 26*, 207-239.

White, R. E. (1986). Generic Business Strategies, Organizational Context, and Performance: An Empirical Investigation. *Strategic Management Journal, 7*, 217-231.

Wicks, A. C., & Freeman, R. E. (1998). Organization Studies and the New Pragmatism: Positivism, Anti-Positivism, and the Search for Ethics. *Organization Science, 9*, 123-140.

Wright, P. M., Kroll, M., Tu, H., & Helms, M. (1991). Generic Strategies and Business Performance: An Empirical Study of the Crew Machine Products Industry. *British Journal of Management, 2*, 1-9.

Yammarino, F. J., Skinner, S. J., & Childers, T. L. (1991). Understanding Mail Survey Response Behavior: A Meta-Analysis. *Public Opinion Quarterly, 55*, 613-639.

Yin, R. K. (2003). *Case Study Research: Design and Methods*. London: Sage Publications.

Yu, J., & Cooper, H. (1983). A Quantitative Review of Research Design Effects on Response Rates to Questionnaires. *Journal of Marketing Research, 20*(February), 36-44.

Zahra, S. A., & Covin, J. G. (1993). Business Strategy, Technology Policy, and Firm Performance. *Strategic Management Journal, 14*(6), 451-478.

Zailani, S., & Rajagopal, P. (2005). Supply Chain Integration and Performance: US versus East Asian Companies. *Supply Chain Management: An International Journal, 10*(5), 379-393.

Zerbini, F., Golfetto, F., & Gibbert, M. (2007). Marking of Competence: Exploring the Resource-Based Content of Value-For-Customer through a Case Study Analysis. *Industrial Marketing Management, 36*, 784-798.

Zhang, C., Cavusgil, S. T., & Roath, A. S. (2003). Manufacturer Governance of Foreign Distributor Relationships: Do Relational Norms enhance Competitiveness in the Export Market? *Journal of International Business Studies, 34*, 550-566.

Zhang, C., Hu, Z., & Gu, F. F. (2008). Intra- and Interfirm Coordination of Export Manufacturers: A Cluster Analysis of Indigenous Chinese Exporters. *Journal of International Marketing, 16*(3), 108-135.

Zhao, X., Lynch, J. G., & Chen, Q. (2010). Reconsidering Baron and Kenny: Myths and Truths about Mediation Analysis. *Journal of Consumer Research, 37*, 2010.

Zhao, Y., & Cavusgil, S. T. (2006). The Effect of Supplier's Market Orientation on Manufacturer's Trust. *Industrial Marketing Management, 35*, 405-414.

Zikmund, W. G., & Babin, B. J. (2007). *Exploring Marketing Research*. Mason, OH: Thomson South-Western.

Zikmund, W. G., Babin, B. J., Carr, J. C., & Griffin, M. (2010). *Business Research Methods*. Mason, Ohio: South Western Cengage Learning.

Zou, S., Fang, E., & Zhao, S. (2003). The Effect of Export Marketing Capabilities on Export Performance: An Investigation of Chinese Exporters. *Journal of International Marketing, 11*(4), 32-55.

Zou, S., & Stan, S. (1998). The Determinants of Export Performance: A Review of the Empirical Literature Between 1987 and 1997. *International Marketing Review, 15*(5), 333-356.

Zou, S., Taylor, C., & Osland, G. (1998). The EXPERF Scale: A Cross National Generalized Export Performance Between 1987-1997. *International Marketing Review, 15*(5), 333-356.

APPENDIX A

Research Questionnaire

(English Version)

TE WHARE WĀNANGA O TE ŪPOKO O TE IKA A MĀUI
VICTORIA
UNIVERSITY OF WELLINGTON

School of Marketing & International Business

Dear Sir/Madam,

We are carrying out research examining export marketing resources, export competitive advantage, and export performance. The study aims to explore export market-based assets and capabilities of Thai manufacturing exporters, which can then be used to help them become more successful in the international export markets. The survey is administered by the School of Marketing and International Business, Victoria University of Wellington, New Zealand as part of the PhD research.

We would very much appreciate it if you would kindly complete the enclosed questionnaire. Please attempt to answer all questions, taking into consideration that there is no right or wrong answer. If none of the response choices exactly correspond with your opinion, please select the choice that best approximates your ideal response. Then kindly return the questionnaire in the envelope that is enclosed, at your convenience.

We would like to assure you that all responses provided will be treated as confidential, and that respondents will not be identified. Further, the findings will be reported at an aggregate level. Following strict procedures for research involving human subjects at Victoria University of Wellington, the study has been assessed and approved by Faculty of Commerce and Administration's Human Ethics Committee (REF : RM 17281).

Thank you very much indeed for your assistance and support. If you need any further information, please contact the research team.

Yours sincerely,

Anon Khamwon	Val Lindsay	Nicholas Ashill
PhD Candidate School of Marketing and International Business Victoria University of Wellington Mao.Khamwon@vuw.ac.nz	Associate Professor in International Business School of Marketing and International Business Victoria University of Wellington Val.Lindsay@vuw.ac.nz	Associate Professor in Marketing School of Marketing and International Business Victoria University of Wellington Nicholas.Ashill@vuw.ac.nz

Section 1: General Information

1. What position do you hold in the company?

   …….....……

2. How long have you been working for the company?

   ……..... years

3. How long has your company been operating?

   ……..... years

4. How many staff (full-time equivalent) work for you company?

   …….. employees

5. Which industry does your company compete in?

   [ ] Food Processing
   [ ] Automotive Parts and Accessories
   [ ] Electronics and Electrical Products
   [ ] Textiles and Garments
   [ ] Gems and Jewellery
   [ ] Furniture and Home Decoration
   [ ] Others (please specify): …….

6. How long has your company been exporting or doing business overseas?

   ……..... years

7. How is your company's business activity (sale revenue) divided between domestic and overseas markets?

   Domestic market ……. %

   Overseas market ……. %

   Total 100 %

8. Please indicate with which overseas regions you currently do business?

   [ ] North America (U.S.A., Canada)
   [ ] Central and South America (Mexico, Brazil, Argentina, Caribbean Countries…)
   [ ] Central and Western Europe (Italy, France, England, German, Belgium, Denmark, Greek…)
   [ ] Eastern Europe (Russia, Bulgaria, Hungary, Poland…)
   [ ] Middle East (United Arab Emirates, Saudi Arabia, Israel, Kuwait …)
   [ ] Africa (Egypt, Nigeria, Morocco, South Africa…)
   [ ] ASEAN (Malaysia, Philippines, Indonesia, Singapore, Brunei, Cambodia, Vietnam, Laos, Myanmar)
   [ ] Asia and Pacific (Japan, China, South Korea, Taiwan, Australia, New Zealand…)

Section 2: Tangible Export Market-Based Assets

Please indicate the extent to which those statements best describe your current export business practice in your company by circling the appropriate number. The scale provided ranges from "1 = much worse" to "7 = much better".

	Compared to our major competitors in terms of	Much Worse			Neutral			Much Better
1.	Number of full-time employees.	1	2	3	4	5	6	7
2.	Percentage of employees mainly involved in the export function.	1	2	3	4	5	6	7
3.	Annual turnover.	1	2	3	4	5	6	7
4.	Availability of financial resources to be devoted to export activities.	1	2	3	4	5	6	7
5.	Availability of financial resources to be devoted to the firm.	1	2	3	4	5	6	7
6.	Use of modern technology and equipment.	1	2	3	4	5	6	7
7.	Preferential access to valuable sources of supply.	1	2	3	4	5	6	7
8.	Production capacity availability.	1	2	3	4	5	6	7

Section 3: Relational Export Market-Based Assets

Please indicate the extent to which those statements best describe your current export business practice in your company by circling the appropriate number. The scale provided ranges from "1 = much worse" to "7 = much better".

	Compared to our major competitors in terms of	Much Worse			Neutral			Much Better
1.	Extent or nature of the distribution network.	1	2	3	4	5	6	7
2.	Relationships with suppliers.	1	2	3	4	5	6	7
3.	The uniqueness of our distribution approach.	1	2	3	4	5	6	7
4.	Relationships with distribution channel intermediaries.	1	2	3	4	5	6	7
5.	Market access through strategic alliances or partnerships.	1	2	3	4	5	6	7
6.	Shared technology through strategic alliances or partnerships.	1	2	3	4	5	6	7
7.	Access to strategic partners' managerial know-how and expertise.	1	2	3	4	5	6	7
8.	Access to strategic partners' financial resources.	1	2	3	4	5	6	7

Section 4: Intellectual Export Market-Based Assets: External Market Orientation

Please indicate the extent to which you disagree or agree with the following statements regarding your current export business practice in your company by circling the appropriate number. The scale provided ranges from "1 = strongly disagree" to "7 = strongly agree".

		Strongly Disagree			Neutral			Strongly Agree
1.	In this company, we generate a lot of information concerning trends (e.g., regulations, technological developments, political, economic) in our export market.	1	2	3	4	5	6	7
2.	We constantly monitor our level of commitment and orientation to serving export customer needs.	1	2	3	4	5	6	7
3.	We periodically review the likely effect of changes in our export environment (e.g., regulation, technology).	1	2	3	4	5	6	7
4.	We generate a lot of information in order to understand the forces which influence our overseas customers' needs and preferences.	1	2	3	4	5	6	7
5.	Too much information concerning our export competitors is discarded before it reaches decision makers.	1	2	3	4	5	6	7
6.	Information which can influence the way we serve our export customers takes forever to reach export personnel.	1	2	3	4	5	6	7
7.	Important information about our export customers is often 'lost in the system'.	1	2	3	4	5	6	7
8.	Information about our export competitors' activities often reaches relevant personnel too late to be of any use.	1	2	3	4	5	6	7
9.	Important information concerning export market trends (regulation, technology) is often discarded as it makes its way along the communication chain.	1	2	3	4	5	6	7
10.	If a major competitor were to launch an intensive campaign targeted at our foreign customers, we would implement a response immediately.	1	2	3	4	5	6	7
11.	We are quick to respond to significant change in our competitors' price structures in foreign markets.	1	2	3	4	5	6	7
12.	We are quick to respond to important changes in our export business environment (e.g., regulation, technology, economy).	1	2	3	4	5	6	7
13.	We rapidly respond to competitive actions that threaten us in our export markets.	1	2	3	4	5	6	7

Section 5: Intellectual Export Market-Based Assets: Internal Market Orientation

Please indicate the extent to which you disagree or agree with the following statements regarding your current export business practice in your company by circling the appropriate number. The scale provided ranges from "1 = strongly disagree" to "7 = strongly agree".

		Strongly Disagree			Neutral			Strongly Agree
1.	Management tries to find out what employees want from the company	1	2	3	4	5	6	7
2.	If management notices one of our employees is acting differently to normal, they will try to find out if there is a problem that is causing a change in behaviour.	1	2	3	4	5	6	7
3.	Management tries to find out our employees' real feelings about their jobs.	1	2	3	4	5	6	7
4.	Management regularly talks to our staff to find out about their work.	1	2	3	4	5	6	7
5.	We have regular staff appraisals in which we discuss what employees want.	1	2	3	4	5	6	7
6.	Management meets with our employees at least once a year to find out what expectations they have of their jobs for the future.	1	2	3	4	5	6	7
7.	Management interacts directly with our employees to find out how to make them more satisfied.	1	2	3	4	5	6	7
8.	We do a lot of internal marketing research e.g., job satisfaction, work motivation.	1	2	3	4	5	6	7
9.	We survey our staff at least once a year to get information about their attitudes to their work.	1	2	3	4	5	6	7
10.	We survey our employees at least once a year to assess the quality of employment.	1	2	3	4	5	6	7
11.	We often talk with our survey people to identify influences on our employees' behaviour (e.g., unions, sales representatives, customers).	1	2	3	4	5	6	7
12.	We have regular staff meetings with employees at all levels attending.	1	2	3	4	5	6	7
13.	Management regularly reports back to our staff about issues that affect their working environment.	1	2	3	4	5	6	7
14.	Management regularly meets with all my staff to report about issues relating to the whole organisation.	1	2	3	4	5	6	7
15.	When we find out that employees are unhappy with our supervision or management, we take corrective action.	1	2	3	4	5	6	7
16.	When we find that employees would like us to modify their condition of employment, the departments make concerted efforts to do so.	1	2	3	4	5	6	7
17.	We make changes to what we do when employee feedback indicates that they are dissatisfied with the status quo.	1	2	3	4	5	6	7

Section 6: Export Market-Based Capabilities

Please indicate the extent to which those statements best describe your current export business practice in your company by circling the appropriate number. The scale provided ranges from "1 = much worse" to "7 = much better".

	Compared to our major competitors in terms of	Much Worse			Neutral			Much Better
1.	Identification of prospective customers.	1	2	3	4	5	6	7
2.	Capturing important market information.	1	2	3	4	5	6	7
3.	Acquiring export market-related information.	1	2	3	4	5	6	7
4.	Making contacts in the export market.	1	2	3	4	5	6	7
5.	Monitoring competitive products in the export markets.	1	2	3	4	5	6	7
6.	Understanding overseas customer requirements.	1	2	3	4	5	6	7
7.	Establishing and maintaining close supplier relationships.	1	2	3	4	5	6	7
8.	Establishing and maintaining close overseas distributor relationships.	1	2	3	4	5	6	7
9.	Development of new products for our export customers.	1	2	3	4	5	6	7
10.	Building of the product to designated or revised specifications.	1	2	3	4	5	6	7
11.	Adoption of new methods and ideas in the manufacturing process.	1	2	3	4	5	6	7

Section 7: Export Competitive Advantage

Please indicate the extent to which those statements best describe your current export competitive advantage by circling the appropriate number. The scale provided ranges from "1 = much worse" to "7 = much better".

	Comparing achievement to our major competitors in terms of	Much Worse			Neutral			Much Better
1.	Cost of raw materials.	1	2	3	4	5	6	7
2.	Production cost per unit.	1	2	3	4	5	6	7
3.	Cost of goods sold.	1	2	3	4	5	6	7
4.	Selling price to end-user abroad.	1	2	3	4	5	6	7
5.	Product quality.	1	2	3	4	5	6	7
6.	Packaging.	1	2	3	4	5	6	7
7.	Design and Style.	1	2	3	4	5	6	7
8.	Brand image abroad.	1	2	3	4	5	6	7
9.	Product accessibility.	1	2	3	4	5	6	7
10.	Technical support/after sales service.	1	2	3	4	5	6	7
11.	Delivery speed and reliability.	1	2	3	4	5	6	7
12.	Product line breadth.	1	2	3	4	5	6	7

Section 8: Export performance

Please indicate the extent to which those statements best describe your current export performance by circling the appropriate number. The scale provided ranges from “1 = much worse” to “7 = much better”.

	Comparing achievement to our major competitors in terms of	Much Worse			Neutral		Much Better	
1.	Export sales volume.	1	2	3	4	5	6	7
2.	Export market share.	1	2	3	4	5	6	7
3.	Profitability.	1	2	3	4	5	6	7
4.	Percentage of sales revenue derived from products introduced in export markets during the past three years.	1	2	3	4	5	6	7
5.	Service quality to distributors.	1	2	3	4	5	6	7
6.	Quality of your company’s relationship with distributors.	1	2	3	4	5	6	7
7.	Reputation of your company to distributors.	1	2	3	4	5	6	7
8.	Distributor loyalty to your company.	1	2	3	4	5	6	7
9.	Overall satisfaction with your total product/service offering to distributors.	1	2	3	4	5	6	7
10.	Quality of your company’s end-user customer relationships.	1	2	3	4	5	6	7
11.	Reputation of your company to end-user.	1	2	3	4	5	6	7
12.	End-user customer loyalty to your firm.	1	2	3	4	5	6	7
13.	End-user customer satisfaction.	1	2	3	4	5	6	7

Thank you very much for your time and cooperation.

APPENDIX B

Research Questionnaire

(Thai Version)

TE WHARE WĀNANGA O TE ŪPOKO O TE IKA A MĀUI

VICTORIA UNIVERSITY OF WELLINGTON

School of Marketing & International Business

เรียน ท่านผู้บริหาร

คณะผู้วิจัยซึ่งประกอบด้วย นายอานนท์ คำวรณ์ นักศึกษาปริญญาเอกทางด้านการตลาดและการค้าระหว่างประเทศ ด.ร. วาล ลินด์เซย์ และ ด.ร. นิโคลัส แอสฮิลล์ ณ มหาวิทยาลัยวิคตอเรีย แห่งเวลลิงตัน ประเทศนิวซีแลนด์ กำลังทำการวิจัยเรื่อง "กลยุทธ์ด้านทรัพยากรทางการตลาด ความได้เปรียบในการแข่งขัน และผลการดำเนินงานของธุรกิจส่งออกในประเทศไทย" การศึกษาครั้งนี้มีวัตถุประสงค์เพื่อสำรวจทรัพยากรทางการตลาดอันประกอบด้วยสินทรัพย์ที่จับต้องได้และจับต้องไม่ได้กับสมรรถภาพทางการตลาด ซึ่งเป็นกระบวนทัศน์ในการจัดการเชิงกลยุทธ์สมัยใหม่เพื่อสร้างความได้เปรียบทางการแข่งขันที่ยั่งยืน โดยตัวอย่างหนึ่งของแนวคิดนี้ที่ได้เริ่มเป็นที่รู้จักกันอย่างแพร่หลายในวงการธุรกิจคือกลยุทธ์น่านน้ำสีคราม ดังนั้นคณะผู้วิจัยคาดหวังว่าผลที่ได้รับจากการวิจัยในครั้งนี้จะสามารถนำมาใช้เป็นแนวทางในการเพิ่มขีดความสามารถในการแข่งขันของผู้ส่งออกไทยให้ประสบความสำเร็จอย่างยั่งยืนในการดำเนินธุรกิจการค้าระหว่างประเทศ

คณะผู้วิจัยจักขอบพระคุณยิ่งหากท่านกรุณาตอบแบบสอบถามที่แนบมาด้วยนี้ โดยพยายามตอบคำถามให้ครบทุกข้อ ซึ่งคำถามแต่ละข้อไม่มีคำตอบที่ถูกหรือผิด หากท่านพบว่าคำถามข้อใดไม่มีตัวเลือกที่ตรงกับความคิดเห็นของท่านพอดีขอให้ท่านเลือกตัวเลือกที่ใกล้เคียงกับคำตอบในใจของท่านมากที่สุด หลังจากท่านตอบแบบสอบถามครบทุกข้อแล้ว กรุณาส่งแบบสอบถามกลับมายังคณะผู้วิจัยทางไปรษณีย์ตามซองที่แนบมาด้วยนี้โดยเร็วที่สุด

คณะผู้วิจัยขอรับรองว่าคำตอบทั้งหมดของท่านจะถูกเก็บเป็นความลับ และจะไม่มีการใช้ข้อมูลใดๆที่เปิดเผยเกี่ยวกับบริษัทของท่านในการรายงานข้อมูล ผลการวิจัยจะถูกรายงานในภาพรวมของธุรกิจส่งออกในประเทศไทย โดยงานวิจัยนี้ได้ผ่านการประเมินและอนุมัติโดยคณะกรรมการจริยธรรมการวิจัยในมนุษย์ตามกฎระเบียบที่เคร่งครัดของคณะพาณิชยศาสตร์และการจัดการ มหาวิทยาลัยวิคตอเรีย แห่งเวลลิงตัน

ขอขอบพระคุณท่านอย่างสูงที่ได้สละเวลาตอบแบบสอบถามชุดนี้ หากท่านต้องการทราบข้อมูลเพิ่มเติม โปรดติดต่อคณะผู้วิจัยได้ตามข้อมูลด้านล่าง

ขอแสดงความนับถือ

อานนท์ คำวรณ์	วาล ลินด์เซย์	นิโคลัส แอสฮิลล์
Anon Khamwon	Val Lindsay	Nicholas Ashill
PhD Candidate	Associate Professor in International Business	Associate Professor in Marketing
School of Marketing and International Business	School of Marketing and International Business	School of Marketing and International Business
Victoria University of Wellington	Victoria University of Wellington	Victoria University of Wellington
Mao.Khamwon@vuw.ac.nz	Val.Lindsay@vuw.ac.nz	Nicholas.Ashill@vuw.ac.nz

SCHOOL OF MARKETING & INTERNATIONAL BUSINESS Te Kura Hokohoko, Pakihi ki te Ao

Level 11, Rutherford House, 23 Lambton Quay, PO Box 600, Wellington, New Zealand

Phone +64-4-463 5330 Fax +64-4-463 5231 Website www.victoria.ac.nz/smib

ตอนที่ 1: ข้อมูลทั่วไป

กรุณาให้ข้อมูลเกี่ยวกับตัวท่านและบริษัทของท่านโดยเติมข้อความ หรือใส่เครื่องหมาย ✓ หน้าข้อความ

ข้อมูลส่วนตัว

1. ท่านดำรงตำแหน่งอะไรในบริษัท

☐ ประธานเจ้าหน้าที่บริหาร ☐ กรรมการผู้จัดการ

☐ ผู้จัดการทั่วไป ☐ ผู้อำนวยการหรือผู้จัดการ ฝ่ายการตลาด/ฝ่ายขาย

☐ อื่นๆ โปรดระบุ.....

2. ท่านมีประสบการณ์การทำงานทางด้านธุรกิจส่งออก มาเป็นเวลานานเท่าใดแล้ว

.....ปี

ข้อมูลเกี่ยวกับลักษณะของบริษัท

1. บริษัทของท่านจัดว่าอยู่ในอุตสาหกรรมประเภทใด

☐ อาหาร (แช่แข็ง แปรรูป และอื่นๆ) ☐ ยานยนต์และชิ้นส่วนยานยนต์

☐ อุปกรณ์ไฟฟ้าและอิเลคทรอนิกส์ ☐ สิ่งทอ เสื้อผ้า และเครื่องนุ่งห่ม

☐ อัญมณีและเครื่องประดับ ☐ เฟอร์นิเจอร์และของแต่งบ้าน

☐ อื่นๆ โปรดระบุ .....

2. บริษัทของท่านมีพนักงานประจำ (รวมถึงพนักงานทุกระดับในโรงงาน) จำนวนทั้งหมดประมาณกี่คน

.....คน

3. บริษัทของท่านเปิดดำเนินกิจการ มาเป็นเวลานานเท่าใดแล้ว

.....ปี

4. บริษัทของท่านดำเนินธุรกิจส่งออก มาเป็นเวลานานเท่าใดแล้ว

.....ปี

5. ยอดขายทั้งหมดของบริษัทของท่านมาจากตลาดภายในประเทศและต่างประเทศ คิดเป็นสัดส่วนเท่าใด

ตลาดภายในประเทศ.....%

ตลาดต่างประเทศ.....%

รวม 100 %

6. บริษัทของท่านดำเนินธุรกิจส่งออกกับประเทศในแถบภูมิภาคใด (ตอบได้มากกว่า 1 ข้อ)

☐ อเมริกาเหนือ (สหรัฐอเมริกา แคนาดา)

☐ อเมริกากลางและอเมริกาใต้ (แม็กซิโก บราซิล อาร์เจนตินา และประเทศแถบแคริเบียน...)

☐ ยุโรปกลางและยุโรปตะวันตก (อิตาลี ฝรั่งเศส อังกฤษ เยอรมัน เบลเยี่ยม เดนมาร์ก กรีก...)

☐ ยุโรปตะวันออก (รัสเซีย บัลแกเรีย ฮังการี โปแลนด์...)

☐ ตะวันออกกลาง (อาหรับเอมิเรตส์ ซาอุดิอาระเบีย อิสราเอล คูเวต...)

☐ แอฟริกา (อียิปต์ ไนจีเรีย โมร็อกโค แอฟริกาใต้...)

☐ อาเซียน (มาเลเซีย ฟิลิปปินส์ อินโดนีเซีย สิงคโปร์ บรูไน กัมพูชา เวียดนาม ลาว พม่า)

☐ เอเชียแปซิฟิก (ญี่ปุ่น จีน เกาหลีใต้ ไต้หวัน ออสเตรเลีย นิวซีแลนด์...)

ตอนที่ 2: สินทรัพย์ที่มีตัวตนจับต้องได้

เมื่อเปรียบเทียบกับคู่แข่งหลักของบริษัท การดำเนินธุรกิจส่งออกของบริษัทของท่านในปัจจุบัน ด้อยกว่าหรือดีกว่าบริษัทคู่แข่งในด้านต่างๆ ต่อไปนี้อย่างไร

โปรดวงกลมหรือทำเครื่องหมาย X ลงบนตัวเลขที่เหมาะสม (เลือกเพียงหนึ่งตัวเลขในแต่ละข้อความ) โดยมีเกณฑ์ดังนี้

" 1 หมายถึง บริษัทของท่านด้อยกว่ามาก " และ " 7 หมายถึง บริษัทของท่านดีกว่ามาก "

	เมื่อเปรียบเทียบกับคู่แข่งหลักในด้านต่างๆ ต่อไปนี้ บริษัทของท่านถือว่ามี...	ด้อยกว่ามาก			พอๆ กัน			ดีกว่ามาก
1.	ยอดขายรวมตลอดทั้งปีของบริษัท	1	2	3	4	5	6	7
2.	จำนวนพนักงานประจำ (รวมถึงพนักงานทุกระดับในโรงงาน)	1	2	3	4	5	6	7
3.	ร้อยละของพนักงานที่ทำหน้าที่เกี่ยวข้องกับการส่งออกเป็นหลัก	1	2	3	4	5	6	7
4.	ความพร้อมของแหล่งเงินทุนเพื่อดำเนินกิจกรรมการส่งออก	1	2	3	4	5	6	7
5.	ความพร้อมของแหล่งเงินทุนของบริษัท	1	2	3	4	5	6	7
6.	การใช้เทคโนโลยีและอุปกรณ์ที่ทันสมัย	1	2	3	4	5	6	7
7.	ความได้เปรียบในการเข้าถึงแหล่งวัตถุดิบที่สำคัญ	1	2	3	4	5	6	7
8.	กำลังการผลิตที่มีอยู่	1	2	3	4	5	6	7

ตอนที่ 3: สินทรัพย์ด้านเครือข่ายความสัมพันธ์

เมื่อเปรียบเทียบกับคู่แข่งหลักของบริษัท การดำเนินธุรกิจส่งออกของบริษัทของท่านในปัจจุบัน ด้อยกว่าหรือดีกว่าบริษัทคู่แข่งในด้านต่างๆ ต่อไปนี้อย่างไร

โปรดวงกลมหรือทำเครื่องหมาย X ลงบนตัวเลขที่เหมาะสม (เลือกเพียงหนึ่งตัวเลขในแต่ละข้อความ) โดยมีเกณฑ์ดังนี้

" 1 หมายถึง บริษัทของท่านด้อยกว่ามาก " และ " 7 หมายถึง บริษัทของท่านดีกว่ามาก "

	เมื่อเปรียบเทียบกับคู่แข่งหลักในด้านต่างๆ ต่อไปนี้ บริษัทของท่านถือว่ามี...	ด้อยกว่ามาก			พอๆ กัน			ดีกว่ามาก
1.	ลักษณะของโครงสร้างเครือข่ายการจัดจำหน่าย	1	2	3	4	5	6	7
2.	ความสัมพันธ์กับผู้จัดหาวัตถุดิบหรือซัพพลายเออร์	1	2	3	4	5	6	7
3.	เอกลักษณ์ที่โดดเด่นในการบริหารจัดการช่องทางการจัดจำหน่าย	1	2	3	4	5	6	7
4.	ความสัมพันธ์กับคนกลางที่เป็นช่องทางการจัดจำหน่าย	1	2	3	4	5	6	7
5.	การเข้าถึงตลาดผ่านบริษัทที่เป็นพันธมิตรหรือหุ้นส่วนทางธุรกิจ	1	2	3	4	5	6	7
6.	การใช้เทคโนโลยีร่วมกันระหว่างบริษัทของท่าน กับบริษัทที่เป็นพันธมิตรหรือหุ้นส่วนทางธุรกิจ	1	2	3	4	5	6	7
7.	การเข้าถึงและใช้ประโยชน์จากความรู้และความเชี่ยวชาญของบริษัทที่เป็นพันธมิตรหรือหุ้นส่วนทางธุรกิจ	1	2	3	4	5	6	7
8.	การเข้าถึงและใช้ประโยชน์จากแหล่งเงินทุนของบริษัทที่เป็นพันธมิตรหรือหุ้นส่วนทางธุรกิจ	1	2	3	4	5	6	7

ตอนที่ 4: สินทรัพย์ทางปัญญาเกี่ยวกับตลาดภายนอกบริษัท

โปรดพิจารณาข้อความเกี่ยวกับการดำเนินธุรกิจส่งออกของบริษัทของท่านในปัจจุบันต่อไปนี้อย่างละเอียด และประเมินข้อความในแต่ละข้อว่า <u>ตรงกับสิ่งที่เกิดขึ้นในบริษัทของท่านมากน้อยเพียงใด</u>

โปรดวงกลมหรือทำเครื่องหมาย X ลงบนตัวเลขที่เหมาะสม (เลือกเพียงหนึ่งตัวเลขในแต่ละข้อความ) โดยมีเกณฑ์ดังนี้

" 1 หมายถึง ไม่เห็นด้วยอย่างยิ่ง " และ " 7 หมายถึง เห็นด้วยอย่างยิ่ง "

	ข้อความ	ไม่เห็นด้วยอย่างยิ่ง						เห็นด้วยอย่างยิ่ง
1.	บริษัทมีการเก็บรวบรวมและวิเคราะห์ข้อมูลต่างๆ เป็นอย่างมากเกี่ยวกับแนวโน้มของตลาดส่งออกของบริษัท (เช่น กฎระเบียบ ความก้าวหน้าทางด้านเทคโนโลยี การเมือง เศรษฐกิจ)	1	2	3	4	5	6	7
2.	บริษัทมีการติดตามประเมินระดับความมุ่งมั่นทุ่มเทและแนวทางในการตอบสนองต่อความต้องการของลูกค้าส่งออกอยู่เป็นประจำ	1	2	3	4	5	6	7
3.	บริษัทมีการทบทวนผลกระทบที่อาจเกิดขึ้นจากการเปลี่ยนแปลงของสภาพแวดล้อมของธุรกิจส่งออก เป็นระยะๆ (เช่น การเปลี่ยนแปลงกฎระเบียบ และเทคโนโลยี)	1	2	3	4	5	6	7
4.	บริษัทมีการเก็บรวบรวมและวิเคราะห์ข้อมูลต่างๆ เป็นอย่างมากเพื่อทำความเข้าใจถึงปัจจัยต่างๆ ที่มีอิทธิพลต่อความต้องการและความพึงพอใจของลูกค้าต่างประเทศ	1	2	3	4	5	6	7
5.	ข้อมูลต่างๆ เกี่ยวกับคู่แข่งในธุรกิจส่งออกของบริษัท มักถูกละเลยก่อนที่จะไปถึงผู้ที่มีอำนาจในการตัดสินใจ	1	2	3	4	5	6	7
6.	ข้อมูลที่มีอิทธิผลกับการให้บริการลูกค้าส่งออก ไม่เคยส่งมาถึงมือผู้ที่ทำหน้าที่ดูแลการส่งออก	1	2	3	4	5	6	7
7.	ข้อมูลสำคัญเกี่ยวกับลูกค้าส่งออกของบริษัท มักสูญหายไปเนื่องจากความบกพร่องของระบบงานในบริษัท	1	2	3	4	5	6	7
8.	ข้อมูลความเคลื่อนไหวของกิจกรรมการส่งออกของคู่แข่งของบริษัทมักไปถึงพนักงานที่เกี่ยวข้องสายเกินกว่าที่จะนำไปใช้ประโยชน์ได้	1	2	3	4	5	6	7
9.	ข้อมูลสำคัญเกี่ยวกับแนวโน้มตลาดส่งออก (เช่น กฎระเบียบ และเทคโนโลยี) มักสูญหายไปเนื่องจากความบกพร่องของการสื่อสารภายในบริษัท	1	2	3	4	5	6	7
10.	หากคู่แข่งหลักของบริษัทเน้นการรณรงค์ส่งเสริมธุรกิจการส่งออกโดยพุ่งเป้าหมายมาที่ลูกค้าต่างประเทศของท่าน บริษัทสามารถปรับกลยุทธ์ตอบโต้ได้ในทันที	1	2	3	4	5	6	7
11.	บริษัทตอบสนองต่อการเปลี่ยนแปลงที่สำคัญในโครงสร้างราคาของคู่แข่งในตลาดต่างประเทศได้อย่างรวดเร็ว	1	2	3	4	5	6	7
12.	บริษัทปรับตัวต่อการเปลี่ยนแปลงสำคัญๆ ที่เกิดขึ้นในสภาพแวดล้อมของธุรกิจส่งออก (เช่น กฎระเบียบ เทคโนโลยี เศรษฐกิจ) ได้อย่างรวดเร็ว	1	2	3	4	5	6	7
13.	บริษัทตอบสนองต่อกิจกรรมการแข่งขันที่คุกคามต่อบริษัทในตลาดส่งออกได้อย่างรวดเร็ว	1	2	3	4	5	6	7

ตอนที่ 5: สินทรัพย์ทางปัญญาเกี่ยวกับตลาดภายในบริษัท

โปรดพิจารณาข้อความเกี่ยวกับการดำเนินธุรกิจส่งออกของบริษัทของท่านในปัจจุบันต่อไปนี้อย่างละเอียด และประเมินข้อความในแต่ละข้อว่า <u>ตรงกับสิ่งที่เกิดขึ้นในบริษัทของท่านมากน้อยเพียงใด</u>

โปรดวงกลมหรือทำเครื่องหมาย X ลงบนตัวเลขที่เหมาะสม (เลือกเพียงหนึ่งตัวเลขในแต่ละข้อความ) โดยมีเกณฑ์ดังนี้

" 1 หมายถึง ไม่เห็นด้วยอย่างยิ่ง " และ " 7 หมายถึง เห็นด้วยอย่างยิ่ง "

	ข้อความ	ไม่เห็นด้วยอย่างยิ่ง						เห็นด้วยอย่างยิ่ง
1.	ฝ่ายบริหารพยายามค้นหาว่าพนักงานต้องการอะไรจากบริษัท	1	2	3	4	5	6	7
2.	ถ้าฝ่ายบริหารสังเกตเห็นว่าพนักงานในบริษัทแสดงพฤติกรรมแปลกไป ฝ่ายบริหารจะพยายามค้นหาสาเหตุของการเปลี่ยนแปลงนั้น	1	2	3	4	5	6	7
3.	ฝ่ายบริหารพยายามศึกษาความรู้สึกที่แท้จริงของพนักงานที่มีต่องานที่พนักงานทำอยู่	1	2	3	4	5	6	7
4.	ฝ่ายบริหารพูดคุยกับพนักงานเป็นประจำเกี่ยวกับงานที่พนักงานทำอยู่	1	2	3	4	5	6	7
5.	บริษัทมีการประเมินพนักงานเป็นประจำ และได้พูดคุยถึงสิ่งที่พนักงานต้องการด้วย	1	2	3	4	5	6	7
6.	ผู้บริหารระดับสูงพบปะกับพนักงานอย่างน้อยปีละครั้งเพื่อรับทราบถึงความคาดหวังในการทำงานของพนักงานในอนาคต	1	2	3	4	5	6	7
7.	ฝ่ายบริหารพบปะพูดคุยกับพนักงานโดยตรงเพื่อค้นหาวิธีที่จะสร้างความพึงพอใจให้แก่พนักงานได้มากขึ้น	1	2	3	4	5	6	7
8.	บริษัทมีการสำรวจทัศนคติและความคิดเห็นของพนักงานอยู่เป็นประจำ เช่นการสำรวจความพึงพอใจในการทำงานหรือแรงจูงใจในการทำงาน	1	2	3	4	5	6	7
9.	บริษัทมีการสำรวจความคิดเห็นของพนักงานเพื่อทราบถึงทัศนคติของพนักงานที่มีต่องานที่พนักงานทำอยู่อย่างน้อยปีละครั้ง	1	2	3	4	5	6	7
10.	บริษัทมีการสำรวจความคิดเห็นของพนักงานเพื่อประเมินคุณภาพชีวิตในการทำงานอย่างน้อยปีละครั้ง	1	2	3	4	5	6	7
11.	ฝ่ายบริหารพูดคุยกับทีมงานที่สำรวจความคิดเห็นของพนักงาน เพื่อระบุถึงอิทธิพลที่มีผลต่อพฤติกรรมของพนักงาน (เช่น สหภาพ ตัวแทนจำหน่าย ลูกค้า)	1	2	3	4	5	6	7
12.	บริษัทมีการประชุมที่ให้พนักงานทุกระดับเข้าร่วมประชุม	1	2	3	4	5	6	7
13.	ฝ่ายบริหารสื่อสารกับพนักงานในประเด็นที่ส่งผลกระทบต่อสภาพแวดล้อมในการทำงานของพนักงานเป็นประจำ	1	2	3	4	5	6	7
14.	ฝ่ายบริหารจัดประชุมชี้แจงให้พนักงานทุกคนทราบในประเด็นที่ส่งผลกระทบต่อบริษัทโดยรวมเป็นประจำ	1	2	3	4	5	6	7
15.	เมื่อพนักงานไม่พึงพอใจกับการบังคับบัญชา บริษัทมีการแก้ไขให้ถูกต้อง	1	2	3	4	5	6	7
16.	เมื่อพนักงานต้องการให้บริษัทปรับเปลี่ยนเงื่อนไขการจ้างงาน ฝ่ายที่เกี่ยวข้องก็ร่วมมือกันดำเนินการอย่างพร้อมเพรียง	1	2	3	4	5	6	7
17.	เมื่อพนักงานให้ข้อมูลว่าไม่พึงพอใจกับสิ่งที่เป็นอยู่ บริษัทก็พร้อมที่จะดำเนินการปรับเปลี่ยนให้	1	2	3	4	5	6	7

ตอนที่ 6: สมรรถภาพทางการตลาด

เมื่อเปรียบเทียบกับคู่แข่งหลักของบริษัท การดำเนินธุรกิจส่งออกของบริษัทของท่านในปัจจุบัน ด้อยกว่าหรือดีกว่าบริษัทคู่แข่งในด้านต่างๆ ต่อไปนี้อย่างไร

โปรดวงกลมหรือทำเครื่องหมาย X ลงบนตัวเลขที่เหมาะสม (เลือกเพียงหนึ่งตัวเลขในแต่ละข้อความ) โดยมีเกณฑ์ดังนี้

" 1 หมายถึง บริษัทของท่านด้อยกว่ามาก " และ " 7 หมายถึง บริษัทของท่านดีกว่ามาก "

	เมื่อเปรียบเทียบกับคู่แข่งหลักในด้านต่างๆ ต่อไปนี้ บริษัทของท่านถือว่ามีความสามารถใน ...	ด้อยกว่ามาก			พอๆ กัน			ดีกว่ามาก
1.	การระบุและจำแนกกลุ่มคนที่คาดว่าจะเป็นลูกค้าในอนาคต	1	2	3	4	5	6	7
2.	การจับกระแสตลาดและข้อมูลทางการตลาดที่สำคัญ	1	2	3	4	5	6	7
3.	การได้มาซึ่งข้อมูลต่างๆที่เกี่ยวข้องกับตลาดส่งออก	1	2	3	4	5	6	7
4.	การติดต่อกับบริษัทหรือหน่วยงานต่างๆ ในตลาดส่งออก	1	2	3	4	5	6	7
5.	การเฝ้าติดตามความเคลื่อนไหวของสินค้าที่มีศักยภาพในตลาดส่งออก	1	2	3	4	5	6	7
6.	การเข้าใจในความต้องการของลูกค้าต่างประเทศ	1	2	3	4	5	6	7
7.	การสร้างและรักษาความสัมพันธ์อันใกล้ชิดกับผู้จัดหาวัตถุดิบหรือซัพพลายเออร์	1	2	3	4	5	6	7
8.	การสร้างและรักษาความสัมพันธ์อันใกล้ชิดกับผู้จัดจำหน่ายสินค้าในต่างประเทศ	1	2	3	4	5	6	7
9.	การพัฒนาผลิตภัณฑ์ใหม่สำหรับลูกค้าในตลาดส่งออกของบริษัท	1	2	3	4	5	6	7
10.	การผลิตหรือแก้ไขปรับปรุงสินค้าให้มีคุณสมบัติตรงตามคำสั่งของลูกค้า	1	2	3	4	5	6	7
11.	การนำแนวคิดและวิธีการใหม่ๆ มาใช้ในกระบวนการผลิต	1	2	3	4	5	6	7

ตอนที่ 7: ความได้เปรียบในการแข่งขัน

เมื่อเปรียบเทียบกับคู่แข่งหลักของบริษัท ปัจจุบันบริษัทของท่านมีความได้เปรียบในการแข่งขันในการดำเนินธุรกิจส่งออก ด้อยกว่าหรือดีกว่าบริษัทคู่แข่งในด้านต่างๆ ต่อไปนี้อย่างไร

โปรดวงกลมหรือทำเครื่องหมาย X ลงบนตัวเลขที่เหมาะสม (เลือกเพียงหนึ่งตัวเลขในแต่ละข้อความ) โดยมีเกณฑ์ดังนี้

" 1 หมายถึง บริษัทของท่านด้อยกว่ามาก " และ " 7 หมายถึง บริษัทของท่านดีกว่ามาก "

	เมื่อเปรียบเทียบความได้เปรียบในการแข่งขันด้านต่างๆ ต่อไปนี้กับบริษัทคู่แข่ง บริษัทของท่านถือว่ามี...	ด้อยกว่ามาก			พอๆ กัน			ดีกว่ามาก
1.	ต้นทุนวัตถุดิบ	1	2	3	4	5	6	7
2.	ต้นทุนการผลิตต่อหน่วย	1	2	3	4	5	6	7
3.	ต้นทุนสินค้าที่ขาย	1	2	3	4	5	6	7
4.	ราคาขายสินค้า	1	2	3	4	5	6	7
5.	คุณภาพสินค้า	1	2	3	4	5	6	7
6.	บรรจุภัณฑ์	1	2	3	4	5	6	7
7.	การออกแบบและรูปลักษณ์ของสินค้า	1	2	3	4	5	6	7
8.	ภาพลักษณ์ตราสินค้าในตลาดต่างประเทศ	1	2	3	4	5	6	7
9.	ความสะดวกของลูกค้าในการเข้าถึงสินค้า	1	2	3	4	5	6	7
10.	การบริการหลังการขายและการสนับสนุนทางเทคนิค	1	2	3	4	5	6	7
11.	ความเร็วและความเชื่อถือได้ในการส่งสินค้า	1	2	3	4	5	6	7
12.	ความหลากหลายของสายผลิตภัณฑ์	1	2	3	4	5	6	7

ตอนที่ 8: ผลการดำเนินงาน

เมื่อเปรียบเทียบกับคู่แข่งหลักของบริษัท ปัจจุบันบริษัทของท่านมีผลการดำเนินงานของธุรกิจส่งออก <u>ด้อยกว่าหรือดีกว่าบริษัทคู่แข่งในด้านต่างๆ ต่อไปนี้อย่างไร</u>

โปรดวงกลมหรือทำเครื่องหมาย X ลงบนตัวเลขที่เหมาะสม (เลือกเพียงหนึ่งตัวเลขในแต่ละข้อความ) โดยมีเกณฑ์ดังนี้

" 1 หมายถึง บริษัทของท่านด้อยกว่ามาก " และ " 7 หมายถึง บริษัทของท่านดีกว่ามาก "

	เมื่อเปรียบเทียบผลการดำเนินงานของธุรกิจส่งออกในด้านต่างๆ ต่อไปนี้กับคู่แข่งหลัก บริษัทของท่านถือว่ามี...	ด้อยกว่ามาก			พอๆ กัน			ดีกว่ามาก
1.	ยอดขายสินค้าส่งออก	1	2	3	4	5	6	7
2.	ส่วนแบ่งการตลาดส่งออก	1	2	3	4	5	6	7
3.	ความสามารถในการทำกำไร	1	2	3	4	5	6	7
4.	สัดส่วนของยอดขายจากการส่งออกเทียบกับยอดขายโดยรวมของบริษัทในรอบสามปีที่ผ่านมา	1	2	3	4	5	6	7
5.	คุณภาพการให้บริการแก่ผู้จัดจำหน่าย	1	2	3	4	5	6	7
6.	คุณภาพของความสัมพันธ์ระหว่างบริษัทของท่านกับผู้จัดจำหน่าย	1	2	3	4	5	6	7
7.	ชื่อเสียงของบริษัทของท่านในสายตาผู้จัดจำหน่าย	1	2	3	4	5	6	7
8.	ความภักดีของผู้จัดจำหน่ายที่มีต่อบริษัทของท่าน	1	2	3	4	5	6	7
9.	ความพึงพอใจโดยรวมของผู้จัดจำหน่ายที่มีต่อสินค้าหรือบริการของบริษัทของท่าน	1	2	3	4	5	6	7
10.	คุณภาพของความสัมพันธ์ระหว่างบริษัทของท่านกับผู้บริโภค	1	2	3	4	5	6	7
11.	ชื่อเสียงของบริษัทของท่านในสายตาของผู้บริโภค	1	2	3	4	5	6	7
12.	ความภักดีของผู้บริโภคที่มีต่อบริษัทของท่าน	1	2	3	4	5	6	7
13.	ความพึงพอใจของผู้บริโภค	1	2	3	4	5	6	7

ขอบพระคุณท่านเป็นอย่างสูงในความร่วมมือของท่านในการตอบแบบสอบถาม

APPENDIX C

Postcard Reminder

TE WHARE WĀNANGA O TE ŪPOKO O TE IKA A MĀUI
VICTORIA
UNIVERSITY OF WELLINGTON

เรียนท่านผู้บริหาร

ตามที่ทางคณะผู้วิจัย ได้ส่งแบบสอบถามการวิจัยเรื่อง กลยุทธ์ด้านทรัพยากรทางการตลาดความได้เปรียบในการแข่งขัน และผลการดำเนินงานของธุรกิจส่งออกในประเทศไทย มาให้ท่านในช่วง 2 สัปดาห์ที่ผ่านมา ทางคณะผู้วิจัยใคร่ขอขอบพระคุณทุกท่านเป็นอย่างสูงที่สละเวลาอันมีค่าเพื่อตอบแบบสอบถามนี้ หากท่านยังไม่ได้ส่งแบบสอบถามกลับมา ทางคณะผู้วิจัย ใคร่ขอความกรุณาท่านตอบแบบสอบถามและข้อมูลกลับมาโดยเร็วที่สุด

หากท่านมีข้อสงสัยประการใด กรุณาติดต่อ นายอานนท์ คำวรณ์ นักศึกษาปริญญาเอก มหาวิทยาลัยวิคตอเรียแห่งเมืองเวลลิงตัน Mao.Khamwon@vuw.ac.nz

APPENDIX D

Descriptive Statistics and Correlations for All Items

Descriptive Statistics for All Items

	N	Mean	Std. Deviation	Skewness		Kurtosis	
	Statistic	Statistic	Statistic	Statistic	Std. Error	Statistic	Std. Error
TA1	320	4.0906	1.36959	-.098	.136	-.359	.272
TA2	320	3.8750	1.26813	.172	.136	-.349	.272
TA3	320	3.6281	1.32346	-.059	.136	-.408	.272
TA4	320	4.3719	1.36773	-.117	.136	-.318	.272
TA5	320	4.4625	1.41593	-.190	.136	-.532	.272
TA6	320	4.4125	1.31253	-.101	.136	-.112	.272
TA7	320	4.5531	1.23823	-.197	.136	-.346	.272
TA8	320	4.4719	1.35506	-.142	.136	-.370	.272
RA1	320	4.2344	1.33135	-.100	.136	-.261	.272
RA2	320	4.3313	1.31889	-.191	.136	-.358	.272
RA3	320	4.4469	1.28543	-.229	.136	-.171	.272
RA4	320	4.5344	1.26890	-.323	.136	-.098	.272
RA5	320	4.8219	1.13763	-.468	.136	.260	.272
RA6	320	4.3062	1.20082	-.171	.136	.080	.272
RA7	320	4.4344	1.16992	-.272	.136	-.281	.272
RA8	320	4.1656	1.26221	-.136	.136	-.221	.272
IA1	320	4.3031	1.39142	-.035	.136	-.407	.272
IA2	320	4.6406	1.33868	-.173	.136	-.499	.272
IA3	320	4.7906	1.27794	-.382	.136	-.047	.272
IA4	320	4.7594	1.34429	-.403	.136	-.154	.272
IA5	320	4.4406	1.18886	.176	.136	-.146	.272
IA6	320	4.9781	1.36095	-.140	.136	-.790	.272
IA7	320	5.1219	1.35564	-.306	.136	-.535	.272
IA8	320	4.7156	1.27075	.003	.136	-.599	.272
IA9	320	4.9719	1.34927	-.288	.136	-.506	.272
IA10	320	4.6812	1.35476	-.213	.136	-.256	.272
IA11	320	4.6219	1.34053	-.243	.136	-.290	.272
IA12	320	4.7406	1.22854	-.188	.136	-.336	.272
IA13	320	4.5406	1.25130	-.093	.136	-.440	.272
IA14	320	4.4281	1.32536	-.263	.136	.077	.272
IA15	320	4.7688	1.24050	-.574	.136	.490	.272
IA16	320	4.7219	1.21155	-.602	.136	.305	.272
IA17	320	5.0063	1.22665	-.535	.136	.013	.272
IA18	320	4.6687	1.29005	-.527	.136	-.010	.272
IA19	320	5.0625	1.47152	-.893	.136	.316	.272
IA20	320	4.9125	1.32442	-.637	.136	.348	.272
IA21	320	4.4375	1.34228	-.296	.136	-.346	.272
IA22	320	4.5000	1.41421	-.338	.136	-.403	.272
IA23	320	4.4187	1.46205	-.396	.136	-.506	.272
IA24	320	4.2125	1.44443	-.194	.136	-.477	.272
IA25	320	4.8156	1.52525	-.534	.136	-.378	.272
IA26	320	4.7594	1.22982	-.428	.136	-.189	.272
IA27	320	4.8313	1.32836	-.365	.136	-.365	.272
IA28	320	4.8813	1.21057	-.357	.136	-.118	.272
IA29	320	4.5375	1.27865	-.405	.136	-.121	.272
IA30	320	4.6188	1.20538	-.227	.136	-.155	.272
MC1	320	4.5625	1.12641	-.282	.136	.245	.272
MC2	320	4.5938	1.11303	-.176	.136	.183	.272
MC3	320	4.4875	1.24939	-.306	.136	.211	.272
MC4	320	4.5781	1.19304	-.175	.136	.095	.272
MC5	320	4.6625	1.22864	-.211	.136	-.347	.272
MC6	320	4.9406	1.22650	-.327	.136	-.243	.272
MC7	320	4.9844	1.15685	-.287	.136	-.272	.272
MC8	320	4.9219	1.37493	-.448	.136	-.262	.272
MC9	320	4.8875	1.41637	-.393	.136	-.368	.272
MC10	320	5.3500	1.23786	-.580	.136	.096	.272

MC11	320	5.0500	1.26342	-.263	.136	-.341	.272
CA1	320	4.3156	1.11856	-.052	.136	.257	.272
CA2	320	4.3062	1.13368	.117	.136	-.135	.272
CA3	320	4.3563	1.10483	.003	.136	-.108	.272
CA4	320	4.5875	1.18447	-.022	.136	-.042	.272
CA5	320	5.4281	1.15878	-.487	.136	-.101	.272
CA6	320	4.8094	1.19215	.027	.136	-.136	.272
CA7	320	5.0281	1.23017	-.125	.136	-.689	.272
CA8	320	4.9281	1.41571	-.459	.136	-.281	.272
CA9	320	4.8594	1.29706	-.274	.136	-.414	.272
CA10	320	5.0500	1.28067	-.562	.136	.210	.272
CA11	320	5.2563	1.20733	-.331	.136	-.522	.272
CA12	320	4.9531	1.46248	-.457	.136	-.497	.272
EP1	320	4.1656	1.50675	.014	.136	-.602	.272
EP2	320	4.0719	1.44854	-.014	.136	-.551	.272
EP3	320	4.4187	1.33189	-.177	.136	-.228	.272
EP4	320	4.3062	1.43401	-.248	.136	-.338	.272
EP5	320	4.7813	1.14564	-.369	.136	.515	.272
EP6	320	4.9125	1.18182	-.472	.136	.438	.272
EP7	320	5.2344	1.21823	-.489	.136	-.197	.272
EP8	320	4.9719	1.21220	-.562	.136	.237	.272
EP9	320	5.1625	1.09937	-.326	.136	-.321	.272
EP10	320	5.0531	1.13935	-.399	.136	-.110	.272
EP11	320	5.1906	1.17360	-.446	.136	-.319	.272
EP12	320	4.9750	1.13894	-.438	.136	.085	.272
EP13	320	5.1844	1.08296	-.447	.136	.086	.272
Valid N (listwise)	320						

Correlations for All Items

	TA 1	TA 2	TA 3	TA 4	TA 5	TA 6	TA 7	TA 8	RA 1	RA 2	RA 3	RA 4	RA 5	RA 6	RA 7	RA 8	IA 1	IA 2	IA 3	IA 4	IA 5	IA 6	IA 7	IA 8	IA 9	IA 10	IA 11	IA 12	IA 13	IA 14	IA 15	IA 16	IA 17	IA 18	IA 19	IA 20	IA 21	IA 22	IA 23	IA 24	IA 25	IA 26	IA 27
TA 1	1	.609	.435	.432	.405	.455	.445	.563	.593	.542	.545	.477	.421	.366	.408	.410	.267	.319	.249	.271	.112	.073	.094	.136	.056	.237	.169	.202	.315	.289	.042	.163	.121	.168	.156	.099	.140	.148	.152	.185	.128	.086	.157
TA 2	.609	1	.521	.471	.423	.489	.433	.556	.519	.430	.471	.422	.408	.398	.354	.354	.256	.263	.212	.220	.122	.027	.076	.112	.099	.241	.221	.223	.325	.224	.069	.143	.119	.176	.149	.089	.148	.138	.143	.153	.089	.121	.133
TA 3	.435	.521	1	.446	.366	.462	.348	.418	.482	.464	.503	.430	.347	.458	.386	.424	.240	.271	.260	.244	.176	.077	.093	.121	.099	.320	.152	.251	.243	.152	.117	.225	.214	.251	.121	.144	.154	.140	.142	.132	.081	.155	.187
TA 4	.432	.471	.446	1	.866	.450	.433	.502	.460	.413	.420	.367	.425	.377	.336	.542	.262	.316	.244	.265	.109	.105	.106	.160	.135	.282	.185	.233	.300	.161	.104	.193	.156	.159	.082	.084	.109	.105	.108	.104	.078	.128	.116
TA 5	.405	.423	.366	.866	1	.474	.424	.476	.436	.398	.405	.368	.402	.387	.346	.539	.236	.286	.272	.245	.137	.142	.111	.181	.156	.250	.163	.235	.294	.131	.111	.167	.166	.125	.091	.067	.065	.069	.074	.077	.077	.071	.118
TA 6	.455	.489	.462	.450	.474	1	.635	.634	.488	.509	.526	.526	.415	.534	.518	.417	.336	.359	.330	.321	.213	.198	.158	.240	.240	.254	.178	.323	.364	.255	.199	.244	.238	.290	.138	.199	.198	.145	.161	.152	.215	.209	.285
TA 7	.445	.433	.348	.433	.424	.635	1	.644	.476	.440	.463	.494	.618	.493	.476	.449	.290	.323	.345	.329	.153	.219	.195	.214	.257	.272	.257	.311	.383	.235	.190	.253	.254	.292	.107	.190	.199	.198	.152	.165	.175	.131	.206
TA 8	.563	.556	.418	.502	.476	.634	.644	1	.538	.493	.507	.449	.478	.450	.446	.403	.343	.331	.331	.283	.170	.199	.173	.220	.216	.251	.190	.300	.335	.233	.089	.181	.157	.204	.130	.109	.157	.158	.177	.171	.188	.142	.224
RA 1	.593	.519	.482	.460	.436	.488	.476	.538	1	.747	.757	.649	.506	.492	.526	.553	.371	.445	.326	.387	.107	.069	.146	.254	.143	.299	.155	.271	.362	.281	.153	.274	.203	.310	.164	.149	.232	.184	.183	.217	.196	.195	.256
RA 2	.542	.430	.464	.413	.398	.509	.440	.493	.747	1	.698	.712	.476	.549	.626	.547	.329	.456	.367	.379	.097	.132	.177	.236	.201	.252	.197	.297	.357	.288	.166	.270	.220	.284	.136	.121	.164	.134	.125	.175	.174	.194	.250
RA 3	.545	.471	.503	.420	.405	.526	.463	.507	.757	.698	1	.693	.528	.553	.598	.551	.418	.516	.391	.447	.180	.127	.195	.301	.188	.404	.255	.369	.452	.265	.246	.285	.302	.369	.171	.227	.308	.235	.240	.246	.204	.251	.279
RA 4	.477	.422	.430	.367	.368	.526	.494	.449	.649	.712	.693	1	.585	.551	.648	.518	.416	.436	.379	.467	.224	.179	.223	.326	.287	.243	.217	.326	.416	.249	.246	.278	.262	.308	.120	.160	.229	.148	.144	.169	.153	.207	.230
RA 5	.421	.408	.347	.425	.402	.415	.618	.478	.506	.476	.528	.585	1	.517	.548	.475	.365	.388	.369	.378	.200	.174	.221	.281	.232	.238	.243	.303	.416	.178	.151	.212	.225	.250	.033	.127	.174	.110	.081	.160	.198	.202	.190
RA 6	.366	.398	.458	.377	.387	.534	.493	.450	.492	.549	.553	.551	.517	1	.755	.626	.402	.392	.344	.364	.149	.159	.148	.232	.156	.322	.183	.354	.403	.156	.153	.222	.218	.300	.129	.194	.201	.127	.145	.183	.161	.226	.202
RA 7	.408	.354	.386	.336	.346	.518	.476	.446	.526	.626	.598	.648	.548	.755	1	.662	.379	.454	.340	.392	.216	.193	.190	.286	.186	.289	.227	.369	.426	.252	.188	.243	.289	.357	.183	.247	.272	.245	.240	.262	.247	.358	.303
RA 8	.410	.354	.424	.542	.539	.417	.449	.403	.553	.547	.551	.518	.475	.626	.662	1	.398	.464	.344	.358	.181	.197	.182	.252	.198	.302	.202	.331	.396	.250	.169	.254	.267	.325	.148	.234	.236	.210	.197	.223	.164	.256	.250
IA 1	.267	.256	.240	.262	.236	.336	.290	.343	.371	.329	.418	.416	.365	.402	.379	.398	1	.690	.628	.614	.332	.316	.299	.402	.268	.309	.203	.409	.422	.336	.257	.376	.333	.369	.165	.195	.311	.241	.187	.302	.230	.314	.347
IA 2	.319	.263	.271	.316	.286	.359	.323	.331	.445	.456	.516	.436	.388	.392	.454	.464	.690	1	.678	.668	.303	.355	.363	.437	.331	.414	.301	.481	.545	.414	.335	.381	.385	.441	.247	.315	.400	.325	.292	.357	.221	.357	.343
IA 3	.249	.212	.260	.244	.272	.330	.345	.331	.326	.367	.391	.379	.369	.344	.340	.344	.628	.678	1	.732	.352	.441	.404	.459	.377	.381	.294	.462	.449	.346	.276	.353	.427	.408	.249	.284	.373	.263	.250	.311	.257	.395	.422
IA 4	.271	.220	.244	.265	.245	.321	.329	.283	.387	.379	.447	.467	.378	.364	.392	.358	.614	.668	.732	1	.324	.335	.352	.400	.304	.355	.302	.444	.441	.336	.288	.365	.427	.467	.187	.277	.385	.242	.267	.359	.299	.382	.397
IA 5	.112	.122	.176	.109	.137	.213	.153	.170	.107	.097	.180	.224	.200	.149	.216	.181	.332	.303	.352	.324	1	.537	.389	.390	.412	.385	.374	.398	.402	.206	.199	.229	.299	.249	.212	.194	.211	.163	.171	.195	.162	.270	.208
IA 6	.073	.027	.077	.105	.142	.198	.219	.199	.069	.132	.127	.179	.174	.159	.193	.197	.316	.355	.441	.335	.537	1	.654	.575	.561	.353	.377	.441	.399	.287	.220	.234	.299	.253	.225	.227	.283	.257	.198	.272	.279	.315	.360
IA 7	.094	.076	.093	.106	.111	.158	.195	.173	.146	.177	.195	.223	.221	.148	.190	.182	.299	.363	.404	.352	.389	.654	1	.586	.645	.347	.315	.412	.410	.294	.300	.294	.365	.292	.167	.215	.272	.220	.204	.257	.200	.292	.367
IA 8	.136	.112	.121	.160	.181	.240	.214	.220	.254	.236	.301	.326	.281	.232	.286	.252	.402	.437	.459	.400	.390	.575	.586	1	.666	.362	.340	.473	.460	.283	.270	.327	.393	.420	.249	.293	.325	.273	.230	.346	.277	.377	.439
IA 9	.056	.099	.099	.135	.156	.240	.257	.216	.143	.201	.188	.287	.232	.156	.186	.198	.268	.331	.377	.304	.412	.561	.645	.666	1	.343	.334	.378	.384	.264	.253	.327	.394	.331	.137	.232	.247	.224	.152	.214	.180	.255	.323
IA 10	.237	.241	.320	.282	.250	.254	.272	.251	.299	.252	.404	.243	.238	.322	.289	.302	.309	.414	.381	.355	.385	.353	.347	.362	.343	1	.467	.572	.579	.240	.240	.341	.403	.397	.197	.274	.368	.281	.269	.309	.210	.317	.301
IA 11	.169	.221	.152	.185	.163	.178	.257	.190	.155	.197	.255	.217	.243	.183	.227	.202	.203	.301	.294	.302	.374	.377	.315	.340	.334	.467	1	.606	.616	.273	.258	.306	.333	.328	.227	.313	.387	.384	.297	.242	.266	.342	.267
IA 12	.202	.223	.251	.233	.235	.323	.311	.300	.271	.297	.369	.326	.303	.354	.369	.331	.409	.481	.462	.444	.398	.441	.412	.473	.378	.572	.606	1	.766	.349	.312	.347	.380	.420	.134	.300	.390	.320	.256	.337	.276	.388	.426
IA 13	.315	.325	.243	.300	.294	.364	.383	.335	.362	.357	.452	.416	.416	.403	.426	.396	.422	.545	.449	.441	.402	.399	.410	.460	.384	.579	.616	.766	1	.423	.347	.385	.427	.449	.189	.341	.411	.352	.284	.337	.222	.368	.364
IA 14	.289	.224	.152	.161	.131	.255	.235	.233	.281	.288	.265	.249	.178	.156	.252	.250	.336	.414	.346	.336	.206	.287	.294	.283	.264	.240	.273	.349	.423	1	.556	.584	.424	.424	.259	.345	.407	.369	.342	.426	.224	.315	.342
IA 15	.042	.069	.117	.104	.111	.199	.190	.089	.153	.166	.246	.246	.151	.153	.188	.169	.257	.335	.276	.288	.199	.220	.300	.270	.253	.240	.258	.312	.347	.556	1	.608	.458	.401	.262	.350	.357	.318	.251	.318	.138	.245	.239
IA 16	.163	.143	.225	.193	.167	.244	.253	.181	.274	.270	.285	.278	.212	.222	.243	.254	.376	.381	.353	.365	.229	.234	.294	.327	.327	.341	.306	.347	.385	.584	.608	1	.613	.567	.351	.467	.520	.429	.404	.462	.254	.332	.317
IA 17	.121	.119	.214	.156	.166	.238	.254	.157	.203	.220	.302	.262	.225	.218	.289	.267	.333	.385	.427	.427	.299	.299	.365	.393	.394	.403	.333	.380	.427	.424	.458	.613	1	.675	.354	.556	.503	.414	.353	.357	.327	.396	.366
IA 18	.168	.176	.251	.159	.125	.290	.292	.204	.310	.284	.369	.308	.250	.300	.357	.325	.369	.441	.408	.467	.249	.253	.292	.420	.331	.397	.328	.420	.449	.424	.401	.567	.675	1	.389	.572	.585	.483	.473	.501	.425	.471	.481
IA 19	.156	.149	.121	.082	.091	.138	.107	.130	.164	.136	.171	.120	.033	.129	.183	.148	.165	.247	.249	.187	.212	.225	.167	.249	.137	.197	.227	.134	.189	.259	.262	.351	.354	.389	1	.582	.437	.491	.507	.436	.315	.362	.320
IA 20	.099	.089	.144	.084	.067	.199	.190	.109	.149	.121	.227	.160	.127	.194	.247	.234	.195	.315	.284	.277	.194	.227	.215	.293	.232	.274	.313	.300	.341	.345	.350	.467	.556	.572	.582	1	.582	.464	.487	.452	.426	.470	.433
IA 21	.140	.148	.154	.109	.065	.198	.199	.157	.232	.164	.308	.229	.174	.201	.272	.236	.311	.400	.373	.385	.211	.283	.272	.325	.247	.368	.387	.390	.411	.407	.357	.520	.503	.585	.437	.582	1	.689	.683	.594	.439	.552	.536
IA 22	.148	.138	.140	.105	.069	.145	.198	.158	.184	.134	.235	.148	.110	.127	.245	.210	.241	.325	.263	.242	.163	.257	.220	.273	.224	.281	.384	.320	.352	.369	.318	.429	.414	.483	.491	.464	.689	1	.775	.559	.384	.448	.389
IA 23	.152	.143	.142	.108	.074	.161	.152	.177	.183	.125	.240	.144	.081	.145	.240	.197	.187	.292	.250	.267	.171	.198	.204	.230	.152	.269	.297	.256	.284	.342	.251	.404	.353	.473	.507	.487	.683	.775	1	.695	.411	.489	.429
IA 24	.185	.153	.132	.104	.077	.152	.165	.171	.217	.175	.246	.169	.160	.183	.262	.223	.302	.357	.311	.359	.195	.272	.257	.346	.214	.309	.242	.337	.337	.426	.318	.462	.357	.501	.436	.452	.594	.559	.695	1	.462	.525	.483
IA 25	.128	.089	.081	.078	.077	.215	.175	.188	.196	.174	.204	.153	.198	.161	.247	.164	.230	.221	.257	.299	.162	.279	.200	.277	.180	.210	.266	.276	.222	.224	.138	.254	.327	.425	.315	.426	.439	.384	.411	.462	1	.640	.571
IA 26	.086	.121	.155	.128	.071	.209	.131	.142	.195	.194	.251	.207	.202	.226	.358	.256	.314	.357	.395	.382	.270	.315	.292	.377	.255	.317	.342	.388	.368	.315	.245	.332	.396	.471	.362	.470	.552	.448	.489	.525	.640	1	.681
IA 27	.157	.133	.187	.116	.118	.285	.206	.224	.256	.250	.279	.230	.190	.202	.303	.250	.347	.343	.422	.397	.208	.360	.367	.439	.323	.301	.267	.426	.364	.342	.239	.317	.366	.481	.320	.433	.536	.389	.429	.483	.571	.681	1
IA 28	.118	.174	.193	.195	.120	.195	.266	.187	.223	.217	.274	.229	.251	.223	.284	.239	.319	.351	.343	.345	.189	.242	.295	.294	.282	.325	.403	.422	.432	.385	.376	.486	.385	.430	.291	.418	.509	.443	.466	.466	.345	.511	.483
IA 29	.176	.223	.167	.143	.087	.209	.275	.202	.204	.110	.258	.209	.232	.264	.286	.201	.315	.304	.368	.376	.186	.273	.284	.303	.272	.347	.388	.370	.386	.313	.294	.425	.352	.409	.315	.346	.465	.425	.453	.418	.303	.449	.463
IA 30	.148	.170	.180	.212	.111	.191	.232	.170	.232	.182	.270	.230	.225	.261	.278	.213	.286	.334	.365	.413	.102	.236	.270	.293	.219	.300	.345	.335	.347	.348	.301	.449	.345	.414	.317	.366	.468	.379	.399	.382	.270	.424	.451
MC 1	.416	.332	.374	.340	.314	.343	.349	.388	.522	.469	.473	.401	.392	.377	.390	.419	.349	.394	.370	.379	.147	.196	.191	.259	.165	.317	.206	.303	.391	.294	.125	.255	.277	.347	.196	.239	.233	.224	.245	.275	.289	.327	.367
MC 2	.489	.381	.393	.318	.309	.422	.414	.441	.572	.506	.581	.492	.438	.410	.468	.403	.373	.442	.405	.412	.209	.191	.228	.284	.138	.340	.243	.324	.442	.331	.195	.334	.330	.314	.184	.280	.340	.241	.244	.243	.229	.288	.339
MC 3	.441	.418	.453	.409	.382	.500	.405	.443	.536	.552	.580	.521	.476	.450	.509	.463	.380	.465	.410	.412	.288	.257	.289	.382	.337	.387	.337	.401	.501	.324	.243	.382	.352	.416	.200	.285	.327	.248	.279	.304	.238	.254	.291
MC 4	.438	.437	.484	.448	.394	.506	.449	.461	.570	.527	.587	.543	.538	.473	.475	.488	.434	.466	.454	.464	.255	.226	.284	.390	.259	.403	.249	.389	.437	.230	.197	.276	.300	.386	.144	.205	.253	.151	.163	.234	.198	.266	.285
MC 5	.389	.389	.414	.426	.377	.501	.436	.429	.576	.533	.596	.516	.509	.474	.491	.447	.436	.513	.492	.512	.261	.241	.258	.366	.238	.408	.295	.409	.453	.237	.235	.293	.326	.386	.164	.255	.320	.236	.227	.254	.280	.324	.370
MC 6	.412	.356	.398	.417	.370	.475	.468	.422	.500	.508	.611	.528	.523	.459	.462	.407	.383	.466	.414	.489	.237	.253	.242	.321	.196	.351	.307	.373	.458	.264	.226	.284	.300	.301	.148	.234	.220	.149	.168	.182	.168	.211	.244
MC 7	.361	.388	.340	.400	.355	.372	.518	.385	.438	.425	.487	.486	.603	.437	.468	.429	.326	.393	.369	.381	.224	.257	.305	.342	.307	.319	.328	.304	.426	.264	.207	.346	.360	.305	.161	.236	.257	.214	.113	.178	.229	.209	.257
MC 8	.438	.419	.461	.427	.350	.473	.508	.469	.507	.555	.557	.579	.518	.457	.489	.423	.371	.441	.389	.470	.221	.234	.256	.341	.296	.327	.302	.322	.436	.258	.168	.275	.290	.332	.188	.177	.243	.206	.177	.237	.213	.265	.303
MC 9	.337	.320	.392	.311	.257	.413	.440	.358	.396	.451	.510	.454	.381	.494	.491	.435	.390	.446	.368	.476	.186	.210	.166	.296	.213	.375	.304	.318	.408	.308	.271	.384	.376	.468	.226	.326	.339	.300	.267	.274	.260	.314	.295
MC 10	.309	.298	.305	.330	.253	.326	.419	.340	.416	.430	.469	.387	.407	.425	.479	.380	.362	.436	.342	.465	.212	.248	.249	.299	.220	.379	.365	.369	.396	.315	.263	.395	.420	.454	.258	.317	.321	.283	.237	.255	.317	.364	.330
MC 11	.394	.337	.395	.357	.313	.462	.471	.468	.440	.458	.500	.447	.421	.463	.528	.406	.400	.487	.370	.481	.240	.256	.209	.308	.271	.392	.361	.455	.445	.304	.267	.380	.384	.456	.263	.327	.364	.347	.314	.296	.275	.339	.379
CA 1	.358	.357	.264	.380	.331	.270	.498	.441	.403	.386	.373	.362	.530	.357	.269	.331	.242	.250	.288	.282	.070	.083	.088	.169	.133	.176	.260	.217	.308	.131	.116	.204	.202	.220	.066	.086	.125	.122	.114	.108	.155	.119	.135
CA 2	.378	.365	.325	.383	.341	.393	.495	.475	.409	.343	.407	.402	.480	.394	.337	.405	.293	.302	.332	.341	.130	.116	.139	.196	.163	.258	.295	.312	.374	.192	.142	.217	.226	.280	.088	.143	.206	.207	.170	.127	.165	.165	.213
CA 3	.383	.341	.286	.371	.325	.365	.479	.453	.446	.401	.431	.443	.475	.397	.375	.403	.270	.288	.308	.362	.093	.139	.143	.191	.141	.208	.313	.276	.346	.170	.104	.201	.211	.217	.092	.103	.146	.156	.127	.096	.134	.116	.154
CA 4	.301	.239	.258	.319	.305	.334	.378	.352	.415	.345	.449	.377	.338	.316	.394	.392	.299	.335	.287	.325	.161	.181	.201	.240	.144	.256	.249	.338	.362	.217	.225	.241	.254	.278	.159	.201	.212	.204	.227	.211	.222	.198	.239
CA 5	.280	.295	.313	.319	.305	.438	.394	.394	.384	.370	.420	.347	.317	.345	.420	.356	.267	.316	.272	.354	.193	.115	.088	.168	.078	.247	.181	.287	.326	.184	.152	.264	.245	.263	.117	.214	.202	.185	.212	.181	.142	.226	.232
CA 6	.316	.366	.370	.274	.247	.451	.354	.376	.390	.419	.455	.374	.335	.391	.390	.377	.311	.314	.293	.294	.179	.061	.113	.138	.104	.232	.172	.255	.353	.232	.133	.276	.234	.275	.146	.236	.236	.213	.202	.258	.139	.193	.215

CA 7	.270	.308	.318	.230	.181	.387	.389	.351	.371	.338	.418	.312	.275	.382	.392	.322	.325	.295	.229	.338	.206	.126	.122	.166	.108	.295	.229	.254	.344	.202	.187	.281	.289	.348	.151	.248	.258	.221	.185	.217	.146	.259	.208
CA 8	.416	.386	.426	.446	.370	.443	.432	.403	.515	.486	.517	.447	.317	.387	.360	.382	.317	.410	.279	.332	.198	.087	.073	.226	.183	.308	.210	.272	.326	.225	.194	.262	.242	.265	.097	.092	.160	.123	.143	.144	.085	.136	.125
CA 9	.381	.369	.404	.376	.314	.500	.462	.432	.529	.513	.572	.524	.395	.440	.447	.428	.364	.437	.349	.417	.152	.126	.138	.274	.231	.395	.260	.398	.435	.199	.163	.248	.233	.307	.056	.192	.230	.172	.163	.195	.158	.211	.255
CA 10	.383	.390	.433	.399	.371	.538	.477	.460	.506	.519	.571	.541	.436	.500	.500	.478	.412	.422	.397	.431	.228	.240	.246	.317	.284	.347	.303	.399	.468	.296	.293	.381	.341	.399	.170	.267	.294	.213	.195	.272	.213	.270	.313
CA 11	.316	.336	.399	.430	.389	.443	.425	.407	.518	.468	.524	.477	.405	.424	.423	.394	.295	.377	.360	.399	.170	.206	.230	.256	.270	.332	.246	.334	.377	.219	.236	.280	.342	.282	.113	.218	.271	.202	.184	.172	.153	.225	.281
CA 12	.314	.384	.304	.319	.310	.355	.428	.370	.389	.377	.410	.387	.353	.365	.388	.380	.307	.387	.332	.353	.190	.185	.133	.207	.139	.279	.285	.339	.408	.240	.167	.231	.299	.336	.167	.255	.237	.171	.173	.156	.134	.215	.243
EP 1	.676	.529	.498	.446	.383	.425	.450	.516	.643	.551	.575	.498	.482	.473	.420	.511	.426	.438	.412	.400	.174	.239	.233	.275	.158	.367	.236	.348	.430	.266	.178	.254	.215	.261	.115	.109	.184	.143	.133	.200	.128	.118	.236
EP 2	.640	.505	.503	.493	.439	.430	.448	.508	.633	.563	.575	.518	.481	.470	.424	.522	.386	.432	.393	.408	.213	.236	.208	.244	.149	.378	.263	.338	.423	.208	.149	.210	.178	.219	.098	.088	.164	.105	.095	.150	.117	.103	.179
EP 3	.515	.373	.396	.494	.462	.471	.483	.482	.588	.556	.564	.481	.482	.478	.476	.529	.342	.428	.385	.365	.226	.223	.204	.228	.188	.383	.315	.400	.501	.310	.186	.325	.277	.313	.127	.168	.181	.210	.177	.195	.202	.161	.223
EP 4	.530	.392	.481	.439	.365	.376	.413	.374	.493	.458	.502	.489	.452	.426	.397	.452	.349	.365	.317	.347	.180	.215	.213	.215	.141	.318	.214	.305	.362	.205	.160	.215	.211	.219	.165	.163	.140	.138	.126	.158	.138	.097	.162
EP 5	.424	.395	.453	.472	.445	.502	.499	.471	.511	.498	.509	.518	.463	.461	.438	.450	.352	.423	.373	.407	.216	.258	.265	.267	.254	.369	.287	.389	.433	.270	.211	.259	.298	.286	.155	.151	.266	.230	.223	.208	.194	.225	.305
EP 6	.452	.421	.452	.478	.423	.476	.468	.437	.503	.532	.550	.581	.464	.408	.447	.432	.363	.430	.376	.443	.204	.256	.279	.282	.282	.304	.288	.369	.431	.244	.232	.235	.279	.333	.174	.181	.249	.244	.214	.224	.186	.201	.282
EP 7	.463	.429	.466	.448	.386	.465	.469	.449	.486	.486	.535	.558	.412	.371	.395	.368	.341	.354	.336	.431	.201	.166	.188	.232	.212	.315	.227	.332	.334	.186	.150	.212	.286	.269	.097	.094	.173	.179	.126	.107	.146	.178	.199
EP 8	.413	.395	.466	.360	.320	.417	.445	.390	.499	.500	.563	.601	.408	.419	.493	.452	.382	.388	.367	.431	.230	.214	.216	.288	.214	.306	.319	.332	.413	.208	.217	.283	.306	.333	.187	.196	.235	.222	.161	.174	.097	.189	.203
EP 9	.392	.388	.412	.379	.352	.436	.452	.407	.486	.501	.532	.549	.457	.394	.462	.432	.328	.385	.343	.419	.259	.201	.233	.271	.238	.313	.282	.356	.408	.191	.161	.215	.271	.286	.116	.161	.162	.155	.119	.136	.119	.170	.218
EP 10	.326	.365	.398	.329	.288	.390	.446	.394	.496	.466	.527	.464	.414	.414	.411	.380	.354	.368	.341	.391	.214	.154	.211	.259	.262	.362	.259	.330	.404	.197	.213	.265	.343	.338	.151	.205	.272	.254	.211	.193	.222	.262	.275
EP 11	.323	.290	.411	.370	.343	.382	.434	.408	.491	.437	.504	.439	.427	.361	.366	.370	.302	.349	.315	.415	.185	.191	.212	.293	.247	.324	.203	.300	.303	.191	.192	.271	.313	.307	.153	.190	.243	.211	.233	.218	.212	.247	.256
EP 12	.331	.326	.387	.326	.277	.399	.466	.392	.465	.446	.498	.450	.434	.425	.443	.398	.371	.360	.352	.408	.168	.192	.199	.290	.228	.348	.273	.327	.403	.240	.202	.295	.364	.353	.152	.215	.315	.234	.204	.209	.219	.309	.304
EP 13	.335	.291	.396	.345	.333	.401	.401	.389	.479	.449	.504	.439	.370	.366	.417	.402	.312	.364	.302	.405	.200	.186	.170	.252	.177	.320	.225	.309	.363	.198	.160	.257	.341	.306	.156	.188	.225	.202	.206	.191	.178	.255	.244

	IA 28	**IA 29**	**IA 30**	**MC 1**	**MC 2**	**MC 3**	**MC 4**	**MC 5**	**MC 6**	**MC 7**	**MC 8**	**MC 9**	**MC 10**	**MC 11**	**CA 1**	**CA 2**	**CA 3**	**CA 4**	**CA 5**	**CA 6**	**CA 7**	**CA 8**	**CA 9**	**CA 10**	**CA 11**	**CA 12**	**EP 1**	**EP 2**	**EP 3**	**EP 4**	**EP 5**	**EP 6**	**EP 7**	**EP 8**	**EP 9**	**EP 10**	**EP 11**	**EP 12**	**EP 13**
TA 1	.118	.176	.148	.416	.489	.441	.438	.389	.412	.361	.438	.337	.309	.394	.358	.378	.383	.301	.280	.316	.270	.416	.381	.383	.316	.314	.676	.640	.515	.530	.424	.452	.463	.413	.392	.326	.323	.331	.335
TA 2	.174	.223	.170	.332	.381	.418	.437	.389	.356	.388	.419	.320	.298	.337	.357	.365	.341	.239	.295	.366	.308	.386	.369	.390	.336	.384	.529	.505	.373	.392	.395	.421	.429	.395	.388	.365	.290	.326	.291
TA 3	.193	.167	.180	.374	.393	.453	.484	.414	.398	.340	.461	.392	.305	.395	.264	.325	.286	.258	.313	.370	.318	.426	.404	.433	.399	.304	.498	.503	.396	.481	.453	.452	.466	.466	.412	.398	.411	.387	.396
TA 4	.195	.143	.212	.340	.318	.409	.448	.426	.417	.400	.427	.311	.330	.357	.380	.383	.371	.319	.319	.274	.230	.446	.376	.399	.430	.319	.446	.493	.494	.439	.472	.478	.448	.360	.379	.329	.370	.326	.345
TA 5	.120	.087	.111	.314	.309	.382	.394	.377	.370	.355	.350	.257	.253	.313	.331	.341	.325	.305	.305	.247	.181	.370	.314	.371	.389	.310	.383	.439	.462	.365	.445	.423	.386	.320	.352	.288	.343	.277	.333
TA 6	.195	.209	.191	.343	.422	.500	.506	.501	.475	.372	.473	.413	.326	.462	.270	.393	.365	.334	.438	.451	.387	.443	.500	.538	.443	.355	.425	.430	.471	.376	.502	.476	.465	.417	.436	.390	.382	.399	.401
TA 7	.266	.275	.232	.349	.414	.405	.449	.436	.468	.518	.508	.440	.419	.471	.498	.495	.479	.378	.394	.354	.389	.432	.462	.477	.425	.428	.450	.448	.483	.413	.499	.468	.469	.445	.452	.446	.434	.466	.401
TA 8	.187	.202	.170	.388	.441	.443	.461	.429	.422	.385	.469	.358	.340	.468	.441	.475	.453	.352	.394	.376	.351	.403	.432	.460	.407	.370	.516	.508	.482	.374	.471	.437	.449	.390	.407	.394	.408	.392	.389
RA 1	.223	.204	.232	.522	.572	.536	.570	.576	.500	.438	.507	.396	.416	.440	.403	.409	.446	.415	.384	.390	.371	.515	.529	.506	.518	.389	.643	.633	.588	.493	.511	.503	.486	.499	.486	.496	.491	.465	.479
RA 2	.217	.110	.182	.469	.506	.552	.527	.533	.508	.425	.555	.451	.430	.458	.386	.343	.401	.345	.370	.419	.338	.486	.513	.519	.468	.377	.551	.563	.556	.458	.498	.532	.486	.500	.501	.466	.437	.446	.449
RA 3	.274	.258	.270	.473	.581	.580	.587	.596	.611	.487	.557	.510	.469	.500	.373	.407	.431	.449	.420	.455	.418	.517	.572	.571	.524	.410	.575	.575	.564	.502	.509	.550	.535	.563	.532	.527	.504	.498	.504
RA 4	.229	.209	.230	.401	.492	.521	.543	.516	.528	.486	.579	.454	.387	.447	.362	.402	.443	.377	.347	.374	.312	.447	.524	.541	.477	.387	.498	.518	.481	.489	.518	.581	.558	.601	.549	.464	.439	.450	.439
RA 5	.251	.232	.225	.392	.438	.476	.538	.509	.523	.603	.518	.381	.407	.421	.530	.480	.475	.338	.317	.335	.275	.317	.395	.436	.405	.353	.482	.481	.482	.452	.463	.464	.412	.408	.457	.414	.427	.434	.370
RA 6	.223	.264	.261	.377	.410	.450	.473	.474	.459	.437	.457	.494	.425	.463	.357	.394	.397	.316	.345	.391	.382	.387	.440	.500	.424	.365	.473	.470	.478	.426	.461	.408	.371	.419	.394	.414	.361	.425	.366
RA 7	.284	.286	.278	.390	.468	.509	.475	.491	.462	.468	.489	.491	.479	.528	.269	.337	.375	.394	.420	.390	.392	.360	.447	.500	.423	.388	.420	.424	.476	.397	.438	.447	.395	.493	.462	.411	.366	.443	.417
RA 8	.239	.201	.213	.419	.403	.463	.488	.447	.407	.429	.423	.435	.380	.406	.331	.405	.403	.392	.356	.377	.322	.382	.428	.478	.394	.380	.511	.522	.529	.452	.450	.432	.368	.452	.432	.380	.370	.398	.402
IA 1	.319	.315	.286	.349	.373	.380	.434	.436	.383	.326	.371	.390	.362	.400	.242	.293	.270	.299	.267	.311	.325	.317	.364	.412	.295	.307	.426	.386	.342	.349	.352	.363	.341	.382	.328	.354	.302	.371	.312
IA 2	.351	.304	.334	.394	.442	.465	.466	.513	.466	.393	.441	.446	.436	.487	.250	.302	.288	.335	.316	.314	.295	.410	.437	.422	.377	.387	.438	.432	.428	.365	.423	.430	.354	.388	.385	.368	.349	.360	.364
IA 3	.343	.368	.365	.370	.405	.410	.454	.492	.414	.369	.389	.368	.342	.370	.288	.332	.308	.287	.272	.293	.229	.279	.349	.397	.360	.332	.412	.393	.385	.317	.373	.376	.336	.367	.343	.341	.315	.352	.302
IA 4	.345	.376	.413	.379	.412	.412	.464	.512	.489	.381	.470	.476	.465	.481	.282	.341	.362	.325	.354	.294	.338	.332	.417	.431	.399	.353	.400	.408	.365	.347	.407	.443	.431	.431	.419	.391	.415	.408	.405
IA 5	.189	.186	.102	.147	.209	.288	.255	.261	.237	.224	.221	.186	.212	.240	.070	.130	.093	.161	.193	.179	.206	.198	.152	.228	.170	.190	.174	.213	.226	.180	.216	.204	.201	.230	.259	.214	.185	.168	.200
IA 6	.242	.273	.236	.196	.191	.257	.226	.241	.253	.257	.234	.210	.248	.256	.083	.116	.139	.181	.115	.061	.126	.087	.126	.240	.206	.185	.239	.236	.223	.215	.258	.256	.166	.214	.201	.154	.191	.192	.186
IA 7	.295	.284	.270	.191	.228	.289	.284	.258	.242	.305	.256	.166	.249	.209	.088	.139	.143	.201	.088	.113	.122	.073	.138	.246	.230	.133	.233	.208	.204	.213	.265	.279	.188	.216	.233	.211	.212	.199	.170
IA 8	.294	.303	.293	.259	.284	.382	.390	.366	.321	.342	.341	.296	.299	.308	.169	.196	.191	.240	.168	.138	.166	.226	.274	.317	.256	.207	.275	.244	.228	.215	.267	.282	.232	.288	.271	.259	.293	.290	.252
IA 9	.282	.272	.219	.165	.138	.337	.259	.238	.196	.307	.296	.213	.220	.271	.133	.163	.141	.144	.078	.104	.108	.183	.231	.284	.270	.139	.158	.149	.188	.141	.254	.282	.212	.214	.238	.262	.247	.228	.177
IA 10	.325	.347	.300	.317	.340	.387	.403	.408	.351	.319	.327	.375	.379	.392	.176	.258	.208	.256	.247	.232	.295	.308	.395	.347	.332	.279	.367	.378	.383	.318	.369	.304	.315	.306	.313	.362	.324	.348	.320
IA 11	.403	.388	.345	.206	.243	.337	.249	.295	.307	.328	.302	.304	.365	.361	.260	.295	.313	.249	.181	.172	.229	.210	.260	.303	.246	.285	.236	.263	.315	.214	.287	.288	.227	.319	.282	.259	.203	.273	.225
IA 12	.422	.370	.335	.303	.324	.401	.389	.409	.373	.304	.322	.318	.369	.455	.217	.312	.276	.338	.287	.255	.254	.272	.398	.399	.334	.339	.348	.338	.400	.305	.389	.369	.332	.332	.356	.330	.300	.327	.309
IA 13	.432	.386	.347	.391	.442	.501	.437	.453	.458	.426	.436	.408	.396	.445	.308	.374	.346	.362	.326	.353	.344	.326	.435	.468	.377	.408	.430	.423	.501	.362	.433	.431	.334	.413	.408	.404	.303	.403	.363
IA 14	.385	.313	.348	.294	.331	.324	.230	.237	.264	.264	.258	.308	.315	.304	.131	.192	.170	.217	.184	.232	.202	.225	.199	.296	.219	.240	.266	.208	.310	.205	.270	.244	.186	.208	.191	.197	.191	.240	.198
IA 15	.376	.294	.301	.125	.195	.243	.197	.235	.226	.207	.168	.271	.263	.267	.116	.142	.104	.225	.152	.133	.187	.194	.163	.293	.236	.167	.178	.149	.186	.160	.211	.232	.150	.217	.161	.213	.192	.202	.160
IA 16	.486	.425	.449	.255	.334	.382	.276	.293	.284	.346	.275	.384	.395	.380	.204	.217	.201	.241	.264	.276	.281	.262	.248	.381	.280	.231	.254	.210	.325	.215	.259	.235	.212	.283	.215	.265	.271	.295	.257
IA 17	.385	.352	.345	.277	.330	.352	.300	.326	.300	.360	.290	.376	.420	.384	.202	.226	.211	.254	.245	.234	.289	.242	.233	.341	.342	.299	.215	.178	.277	.211	.298	.279	.286	.306	.271	.343	.313	.364	.341
IA 18	.430	.409	.414	.347	.314	.416	.386	.386	.301	.305	.332	.468	.454	.456	.220	.280	.217	.278	.263	.275	.348	.265	.307	.399	.282	.336	.261	.219	.313	.219	.286	.333	.269	.333	.286	.338	.307	.353	.306
IA 19	.291	.315	.317	.196	.184	.200	.144	.164	.148	.161	.188	.226	.258	.263	.066	.088	.092	.159	.117	.146	.151	.097	.056	.170	.113	.167	.115	.098	.127	.165	.155	.174	.097	.187	.116	.151	.153	.152	.156
IA 20	.418	.346	.366	.239	.280	.285	.205	.255	.234	.236	.177	.326	.317	.327	.086	.143	.103	.201	.214	.236	.248	.092	.192	.267	.218	.255	.109	.088	.168	.163	.151	.181	.094	.196	.161	.205	.190	.215	.188
IA 21	.509	.465	.468	.233	.340	.327	.253	.320	.220	.257	.243	.339	.321	.364	.125	.206	.146	.212	.202	.236	.258	.160	.230	.294	.271	.237	.184	.164	.181	.140	.266	.249	.173	.235	.162	.272	.243	.315	.225
IA 22	.443	.425	.379	.224	.241	.248	.151	.236	.149	.214	.206	.300	.283	.347	.122	.207	.156	.204	.185	.213	.221	.123	.172	.213	.202	.171	.143	.105	.210	.138	.230	.244	.179	.222	.155	.254	.211	.234	.202
IA 23	.466	.453	.399	.245	.244	.279	.163	.227	.168	.113	.177	.267	.237	.314	.114	.170	.127	.227	.212	.202	.185	.143	.163	.195	.184	.173	.133	.095	.177	.126	.223	.214	.126	.161	.119	.211	.233	.204	.206
IA 24	.466	.418	.382	.275	.243	.304	.234	.254	.182	.178	.237	.274	.255	.296	.108	.127	.096	.211	.181	.258	.217	.144	.195	.272	.172	.156	.200	.150	.195	.158	.208	.224	.107	.174	.136	.193	.218	.209	.191
IA 25	.345	.303	.270	.289	.229	.238	.198	.280	.168	.229	.213	.260	.317	.275	.155	.165	.134	.222	.142	.139	.146	.085	.158	.213	.153	.134	.128	.117	.202	.138	.194	.186	.146	.097	.119	.222	.212	.219	.178
IA 26	.511	.449	.424	.327	.288	.254	.266	.324	.211	.209	.265	.314	.364	.339	.119	.165	.116	.198	.226	.193	.259	.136	.211	.270	.225	.215	.118	.103	.161	.097	.225	.201	.178	.189	.170	.262	.247	.309	.255
IA 27	.483	.463	.451	.367	.339	.291	.285	.370	.244	.257	.303	.295	.330	.379	.135	.213	.154	.239	.232	.215	.208	.125	.255	.313	.281	.243	.236	.179	.223	.162	.305	.282	.199	.203	.218	.275	.256	.304	.244
IA 28	1	.677	.564	.277	.278	.283	.265	.264	.230	.249	.251	.307	.329	.402	.181	.241	.208	.226	.273	.271	.301	.233	.265	.299	.270	.222	.219	.210	.198	.205	.216	.234	.191	.226	.175	.282	.254	.314	.239
IA 29	.677	1	.695	.292	.321	.324	.297	.313	.234	.247	.233	.361	.368	.377	.194	.245	.215	.182	.269	.283	.307	.210	.267	.324	.272	.245	.318	.238	.230	.255	.286	.272	.183	.277	.179	.260	.182	.296	.207
IA 30	.564	.695	1	.359	.368	.372	.326	.332	.279	.315	.296	.384	.430	.391	.192	.258	.222	.186	.283	.324	.278	.202	.260	.305	.276	.219	.271	.219	.215	.238	.298	.324	.236	.287	.215	.270	.222	.306	.246

MC 1	.277	.292	.359	1	.745	.606	.553	.600	.535	.375	.464	.494	.481	.463	.389	.446	.461	.341	.377	.344	.335	.377	.436	.419	.410	.408	.519	.459	.478	.427	.402	.379	.349	.335	.402	.441	.409	.478	.449
MC 2	.278	.321	.368	.745	1	.711	.640	.654	.632	.477	.520	.506	.490	.489	.398	.444	.444	.305	.427	.390	.350	.381	.471	.489	.428	.447	.537	.496	.453	.436	.417	.407	.431	.459	.467	.430	.405	.469	.458
MC 3	.283	.324	.372	.606	.711	1	.744	.647	.608	.495	.551	.516	.485	.517	.392	.428	.414	.354	.410	.513	.405	.500	.574	.614	.457	.417	.520	.500	.485	.429	.471	.502	.435	.469	.490	.495	.464	.473	.436
MC 4	.265	.297	.326	.553	.640	.744	1	.758	.694	.524	.607	.536	.523	.511	.462	.488	.466	.380	.417	.468	.386	.420	.590	.560	.482	.420	.583	.538	.473	.501	.526	.521	.467	.473	.497	.466	.456	.479	.429
MC 5	.264	.313	.332	.600	.654	.647	.758	1	.761	.554	.593	.564	.560	.544	.459	.486	.475	.365	.395	.410	.380	.426	.584	.529	.521	.431	.559	.537	.506	.475	.524	.517	.438	.408	.447	.452	.423	.440	.407
MC 6	.230	.234	.279	.535	.632	.608	.694	.761	1	.667	.702	.622	.633	.560	.452	.448	.481	.387	.419	.415	.383	.465	.558	.527	.489	.418	.523	.516	.493	.517	.542	.565	.496	.515	.554	.507	.474	.475	.457
MC 7	.249	.247	.315	.375	.477	.495	.524	.554	.667	1	.673	.538	.586	.511	.464	.443	.424	.318	.295	.382	.287	.317	.402	.515	.432	.370	.431	.429	.421	.411	.525	.547	.439	.462	.468	.438	.342	.388	.328
MC 8	.251	.233	.296	.464	.520	.551	.607	.593	.702	.673	1	.610	.598	.558	.446	.430	.450	.369	.369	.435	.372	.467	.540	.586	.526	.421	.506	.492	.453	.497	.602	.661	.574	.589	.612	.549	.493	.531	.446
MC 9	.307	.361	.384	.494	.506	.516	.536	.564	.622	.538	.610	1	.754	.685	.389	.414	.408	.363	.438	.425	.574	.463	.457	.522	.442	.560	.426	.404	.407	.403	.489	.502	.451	.500	.495	.476	.420	.467	.416
MC 10	.329	.368	.430	.481	.490	.485	.523	.560	.633	.586	.598	.754	1	.704	.400	.397	.424	.400	.485	.377	.496	.388	.441	.487	.485	.463	.416	.381	.439	.416	.492	.473	.421	.426	.481	.498	.414	.471	.419
MC 11	.402	.377	.391	.463	.489	.517	.511	.544	.560	.511	.558	.685	.704	1	.437	.451	.414	.437	.531	.431	.499	.468	.488	.512	.468	.468	.467	.455	.474	.421	.540	.515	.512	.517	.529	.521	.520	.528	.518
CA 1	.181	.194	.192	.389	.398	.392	.462	.459	.452	.464	.446	.389	.400	.437	1	.742	.700	.397	.367	.341	.312	.337	.407	.361	.367	.402	.506	.501	.452	.371	.382	.370	.406	.344	.412	.400	.405	.412	.376
CA 2	.241	.245	.258	.446	.444	.428	.488	.486	.448	.443	.430	.414	.397	.451	.742	1	.836	.487	.375	.401	.374	.348	.483	.421	.398	.387	.524	.531	.490	.378	.416	.362	.415	.380	.413	.415	.373	.387	.347
CA 3	.208	.215	.222	.461	.444	.414	.466	.475	.481	.424	.450	.408	.424	.414	.700	.836	1	.529	.395	.368	.392	.343	.514	.424	.465	.412	.541	.548	.503	.420	.411	.391	.415	.401	.443	.438	.390	.416	.377
CA 4	.226	.182	.186	.341	.305	.354	.380	.365	.387	.318	.369	.363	.400	.437	.397	.487	.529	1	.531	.384	.438	.429	.407	.439	.423	.342	.407	.394	.525	.407	.430	.418	.413	.426	.439	.486	.490	.455	.450
CA 5	.273	.269	.283	.377	.427	.410	.417	.395	.419	.295	.369	.438	.485	.531	.367	.375	.395	.531	1	.608	.616	.533	.476	.482	.477	.384	.388	.348	.442	.359	.463	.428	.535	.457	.541	.512	.532	.500	.579
CA 6	.271	.283	.324	.344	.390	.513	.468	.410	.415	.382	.435	.425	.377	.431	.341	.401	.368	.384	.608	1	.628	.508	.512	.487	.393	.356	.402	.382	.317	.320	.438	.426	.439	.421	.449	.474	.400	.442	.450
CA 7	.301	.307	.278	.335	.350	.405	.386	.380	.383	.287	.372	.574	.496	.499	.312	.374	.392	.438	.616	.628	1	.606	.537	.487	.432	.539	.375	.372	.372	.272	.403	.392	.496	.463	.472	.554	.507	.535	.507
CA 8	.233	.210	.202	.377	.381	.500	.420	.426	.465	.317	.467	.463	.388	.468	.337	.348	.343	.429	.533	.508	.606	1	.635	.586	.497	.444	.511	.519	.511	.414	.537	.508	.646	.529	.551	.613	.652	.578	.579
CA 9	.265	.267	.260	.436	.471	.574	.590	.584	.558	.402	.540	.457	.441	.488	.407	.483	.514	.407	.476	.512	.537	.635	1	.738	.612	.467	.554	.549	.530	.429	.534	.505	.576	.512	.555	.586	.526	.547	.472
CA 10	.299	.324	.305	.419	.489	.614	.560	.529	.527	.515	.586	.522	.487	.512	.361	.421	.424	.439	.482	.487	.487	.586	.738	1	.675	.559	.506	.485	.513	.434	.623	.604	.531	.564	.591	.580	.507	.542	.473
CA 11	.270	.272	.276	.410	.428	.457	.482	.521	.489	.432	.526	.442	.485	.468	.367	.398	.465	.423	.477	.393	.432	.497	.612	.675	1	.525	.450	.445	.496	.407	.555	.545	.573	.504	.594	.569	.545	.529	.484
CA 12	.222	.245	.219	.408	.447	.417	.420	.431	.418	.370	.421	.560	.463	.468	.402	.387	.412	.342	.384	.356	.539	.444	.467	.559	.525	1	.413	.409	.416	.349	.428	.400	.390	.358	.428	.421	.411	.455	.399
EP 1	.219	.318	.271	.519	.537	.520	.583	.559	.523	.431	.506	.426	.416	.467	.506	.524	.541	.407	.388	.402	.375	.511	.554	.506	.450	.413	1	.908	.690	.748	.597	.586	.578	.553	.553	.528	.519	.547	.515
EP 2	.210	.238	.219	.459	.496	.500	.538	.537	.516	.429	.492	.404	.381	.455	.501	.531	.548	.394	.348	.382	.372	.519	.549	.485	.445	.409	.908	1	.688	.715	.584	.591	.607	.556	.546	.531	.525	.493	.501
EP 3	.198	.230	.215	.478	.453	.485	.473	.506	.493	.421	.453	.407	.439	.474	.452	.490	.503	.525	.442	.317	.372	.511	.530	.513	.496	.416	.690	.688	1	.637	.617	.583	.546	.499	.568	.518	.502	.464	.472
EP 4	.205	.255	.238	.427	.436	.429	.501	.475	.517	.411	.497	.403	.416	.421	.371	.378	.420	.407	.359	.320	.272	.414	.429	.434	.407	.349	.748	.715	.637	1	.604	.591	.542	.515	.549	.485	.453	.452	.430
EP 5	.216	.286	.298	.402	.417	.471	.526	.524	.542	.525	.602	.489	.492	.540	.382	.416	.411	.430	.463	.438	.403	.537	.534	.623	.555	.428	.597	.584	.617	.604	1	.840	.657	.621	.643	.583	.537	.529	.465
EP 6	.234	.272	.324	.379	.407	.502	.521	.517	.565	.547	.661	.502	.473	.515	.370	.362	.391	.418	.428	.426	.392	.508	.505	.604	.545	.400	.586	.591	.583	.591	.840	1	.724	.712	.708	.560	.527	.487	.468
EP 7	.191	.183	.236	.349	.431	.435	.467	.438	.496	.439	.574	.451	.421	.512	.406	.415	.415	.413	.535	.439	.496	.646	.576	.531	.573	.390	.578	.607	.546	.542	.657	.724	1	.752	.777	.646	.690	.574	.625
EP 8	.226	.277	.287	.335	.459	.469	.473	.408	.515	.462	.589	.500	.426	.517	.344	.380	.401	.426	.457	.421	.463	.529	.512	.564	.504	.358	.553	.556	.499	.515	.621	.712	.752	1	.780	.641	.599	.633	.599
EP 9	.175	.179	.215	.402	.467	.490	.497	.447	.554	.468	.612	.495	.481	.529	.412	.413	.443	.439	.541	.449	.472	.551	.555	.591	.594	.428	.553	.546	.568	.549	.643	.708	.777	.780	1	.691	.671	.644	.667
EP 10	.282	.260	.270	.441	.430	.495	.466	.452	.507	.438	.549	.476	.498	.521	.400	.415	.438	.486	.512	.474	.554	.613	.586	.580	.569	.421	.528	.531	.518	.485	.583	.560	.646	.641	.691	1	.815	.803	.759
EP 11	.254	.182	.222	.409	.405	.464	.456	.423	.474	.342	.493	.420	.414	.520	.405	.373	.390	.490	.532	.400	.507	.652	.526	.507	.545	.411	.519	.525	.502	.453	.537	.527	.690	.599	.671	.815	1	.801	.833
EP 12	.314	.296	.306	.478	.469	.473	.479	.440	.475	.388	.531	.467	.471	.528	.412	.387	.416	.455	.500	.442	.535	.578	.547	.542	.529	.455	.547	.493	.464	.452	.529	.487	.574	.633	.644	.803	.801	1	.799
EP 13	.239	.207	.246	.449	.458	.436	.429	.407	.457	.328	.446	.416	.419	.518	.376	.347	.377	.450	.579	.450	.507	.579	.472	.473	.484	.399	.515	.501	.472	.430	.465	.468	.625	.599	.667	.759	.833	.799	1